SB405-VL

Storage Barebone
User's Manual

UM_SB405-VL_v1.3_091622

Table of Contents

Preface i
About This Manual iv
Chapter 1. Product Features 1
1.1 Box Contents 1
1.2 Specifications 2
1.3 System Block Diagram 3
1.4 Feature 4
Chapter 2. Hardware Setup 6
2.1 Central Processing Unit 6
2.1.1 Processor Installation 6
2.1.2 Heatsink Placement 8
2.2 System Memory 9
2.2.1 DIMM Placement 9
2.2.2 DIMM Population 10
2.2.3 DCPMM DIMM Population 12
2.2.4 DIMM Installation 13
2.3 Top Cover 14
2.4 Motherboard 16
2.5 Power Supply Unit 17
2.6 Fan 18
2.6.1 External Fan 18
2.6.2 Internal Fan 18
2.7 Internal Disk Drive 19
2.7.1 Disk Drive: 2.5-inch 19
2.7.2 Disk Drive: 3.5-inch 20
2.7.3 LED Indicator 21
2.8 Riser Card 22
2.9 Bridge Board 23
2.10 Rear Handle 23
2.11 Cable Cover 24
2.12 Slide Rail Installation 25
Chapter 3. Hardware Settings 27
3.1 Motherboard 27
3.1.1 Block Diagram 27
3.1.2 Content List 28
3.1.3 Placement 29
3.1.4 Connector 30
3.1.5 Jumper 34
3.1.6 Internal LED 36
3.2 Drive Backplane: 24 Bay 37
3.2.2 Connector Placement 37
3.2.2 Internal LED 38
3.3 Drive Backplane: 30 Bay 39
3.3.1 Connector Placement 39
3.3.2 Internal LED 40

Chapter 4. BIOS Configuration Settings 41
4.1 Navigation Keys 41
4.2 BIOS Setup 42
4.2.1 Menu 42
4.3 Main 43
4.3.1 Main 43
4.4 Advanced 44
4.4.1 Peripheral Configuration 44
4.4.2 Video Configuration 44
4.4.3 OEMBoard Function 44
4.4.4 SIO AST2500 45
4.4.5 Socket Configuration 45
4.4.6 ME Configuration 51
4.4.7 PCH Configuration 52
4.4.8 H2O IPMI Configuration 53
4.4.9 APEI Configuration 53
4.4.10 Console Redirection 53
4.4.11 H2O Event Log Config Manager 54
4.4.12 H2oUve Configuration 54
4.5 Security 55
4.5.1 Security 55
4.6 Power 56
4.6.1 Power 56
4.7 Boot 57
4.7.1 Boot 57
4.8 Exit 58
4.8.1 Exit 58
4.9 BIOS Update Process 59
Chapter 5. BMC Configuration Settings 60
5.1 Login 60
5.2 Web GUI 61
5.2.1 Menu Bar 61
5.2.2 User Information and Quick Button 62
5.2.3 Dashboard 63
5.2.4 Sensor 63
5.2.5 FRU Information 64
5.2.6 Logs and Reports 64
5.2.7 Settings 65
5.2.8 Remote Control 66
5.2.9 Power Control 70
5.2.10 Maintenance 71
5.2.10.1 Firmware Update 72
5.2.10.2 BIOS Firmware Update 76
5.2.11 Sign out 78
Chapter 6. Technical Support 79

Document Release History

Release Date	Version	Update Content
February, 2021	1	User's Manual release to public.
July, 2021	1.1	Spec. update.
September, 2021	1.2	Fan update Cable Routing Block Diagram PSU/LAN/disk drive LED
September, 2022	1.3	Section4.9/ Section 5.2.10 Firmware SOP update.

Copyright © 2021 AIC®, Inc. All Rights Reserved.

This document contains proprietary information about AIC® products and is not to be disclosed or used except in accordance with applicable agreements.

Preface

Copyright

No part of this publication may be reproduced, stored in a retrieval system, or transmitted in any form or by any means, electronic, mechanical, photo-static, recording or otherwise, without the prior written consent of the manufacturer.

Trademarks

All products and trade names used in this document are trademarks or registered trademarks of their respective holders.

Changes

The material in this document is for information purposes only and is subject to change without notice.

Warning

1. A shielded-type power cord is required in order to meet FCC emission limits and also to prevent interference to the nearby radio and television reception. It is essential that only the supplied power cord be used.
2. Use only shielded cables to connect I/O devices to this equipment.
3. You are cautioned that changes or modifications not expressly approved by the party responsible for compliance could void your authority to operate the equipment.

Disclaimer

AIC® shall not be liable for technical or editorial errors or omissions contained herein. The information provided is provided "as is" without warranty of any kind. To the extent permitted by law, neither AIC® or its affiliates, subcontractors or suppliers will be liable for incidental, special or consequential damages including downtime cost; lost profits; damages relating to the procurement of substitute products or services; or damages for loss of data, or software restoration. The information in this document is subject to change without notice.

Instruction Symbols

Special attention should be given to the instruction symbols below.

NOTE	This symbol indicates that there is an explanatory or supplementary instruction.
CAUTION	This symbol denotes possible hardware impairment. Upmost precaution must be taken to prevent serious harware damage.
WARNING	This symbol serves as a warning alert for potential body injury. The user may suffer possible injury from disregard or lack of attention.

Safety Instructions

Before you commence, please attentively read the following important discretions below. All cautions and warnings on the equipment or in the manuals should be circumspectly noted and reviewed.

Always ground yourself to prevent static electricity.
請全程接地，以防止靜電。
请全程接地，以防止静电。
Всегда заземляйте себя, чтобы избежать статического электричества.
Aard jezelf altijd om statische elektriciteit te voorkomen.

- Firmly ground yourself at all times when installing or assembling the internal components of the server. Most of electronic components in the server are highly sensitive to electrical static discharge.
- Use a solid grounding wrist strap and distintively place all electronic components in static-shielded devices to prevent static. Grounding wrist straps can be purchased in any electronic supply store.
- Confirm that the power source is turned off and then disconnect the power cords from your system before performing any type of installation or manual servicing. A sudden surge of power could serverly damage the sensitive electronic components.
- Do not precipitously open the system's top cover. If you must open the cover for maintenance purposes, only a trained technician should be allowed to proceed this action. Integrated circuits on computer boards are highly sensitive to static electricity. Before operating a board or integrated circuit, touch an unpainted portion of the system unit chassis for a couple of seconds to discharge any static electricity on your body.

Place the server in a stable environment.
請將伺服器放置在穩定的環境中。
请将伺服器放置在稳定的环境中。
Поместите сервер в стабильную среду.
Plaats de server in een stabiele omgeving.

- Place this equipment on a stable surface when installing. A small mild drop or fall could cause fatal injury to both the equipment and the person handling the equipment.
- Please keep this equipment away from humidity to prevent vast rust and disintergration.
- Carefully and accurately mount the equipment into the rack. Uneven mechanical loading may lead to hazadous consequences.
- This equipment is to be installed for operation in an environment with maximum ambient temperature below 35°C.
- Review the environment before performing any installation or servicing. Keep the equipment away from hazardous and uneven grounds.
- This server must be installed only in Restricted Acess Locations.

Handle equipment with care.
請謹慎操作設備。
请谨慎操作设备。
Обращайтесь с оборудованием осторожно.
Behandel de apparatuur voorzichtig.

- Do not cover the openings of the system. The openings on the system are for air convection, which intentionally protect the equipment from overheating.
- Never pour any liquid into ventilation openings of the system. This could cause catastrophic fire or electrical shock.

- Ensure that the voltage of the power source is within the specification on the label when connecting the equipment to the power outlet. The current load and output power of loads must be within the specification.
- This equipment must be firmly connected to reliable grounding before usage. Pay special attention to power supplied other than direct connections, e.g. using of power strips.
- Place the power cord out of the way of foot traffic. Do not place anything over the power cord. The power cord must be rated for the product, voltage and current marked on the product's electrical ratings label. The voltage and current rating of the cord should be greater than the voltage and current rating marked on the product.

Pay attention to hardware maintenance.
注意硬體維護。
注意硬体维护。
Обратите внимание на обслуживание оборудования.
Besteed aandacht aan hardware-onderhoud.

- If the equipment is not used for a long time, disconnect the equipment from mains to avoid being damaged by transient over-voltage.
- Module and drive bays must not be empty. They must have a dummy cover.
- Never open the equipment without professional assistence. For safety reasons, only qualified service personnel should open the equipment.
- If one of the following situations arise, the equipment should be checked and tested by service personnel:
  1. The power cord or plug is damaged.
  2. Liquid has penetrated the equipment.
  3. The equipment has been exposed to moisture.
  4. The equipment does not work well or will not work according to its user manual.
  5. The equipment has been dropped and/or damaged.
  6. The equipment has obvious signs of breakage.
  7. Please disconnect this equipment from the AC outlet before cleaning. Do not use liquid or detergent for cleaning. The use of a moisture sheet or cloth is recommended for cleaning.

CAUTION
The equipment intended for installation should be placed in Restricted Access Location.

CAUTION
There will be a risk of explosion if battery is replaced by an incorrect type. Dispose of used batteries according to the instructions. After performing any installation or servicing, make sure the enclosure is correct in position before turning on the power.

CAUTION
This unit may have more than one power supply. Disconnect all power sources before maintenance to avoid electric shock.

About This Manual

Thank you for selecting and purchasing the SB405-VL.

This user's manual is provided for professional technicians to perform easy hardware setup, basic system configurations and quick software startup. This document pellucidly presents a brief overview of the product design, device installation and firmware settings for SB405-VL. For the latest version of this user's manual, please refer to the AIC® website: https://www.aicipc.com/en/productdetail/51304.

Chapter 1 Product Features

SB405-VL is a flexible storage server barebone that is specifically designed to accommodate diverse corporations and enterprises for managing heavy workloads and multiple applications.

Chapter 2 Hardware Setup

This chapter displays an easy installation guide for assembling the hardware in this product. Utmost caution for proceeding to set up the hardware is highly advised. Most of the components are highly fragile and vulnerable to exterior influence. Do not endanger the device by placing the device in an unstable environment.

Chapter 3 Hardware Settings

This chapter provides descriptions for the hardware, including multifarious connectors, jumpers and LED descriptions. These descriptions assist users to configure different settings and functions of the motherboard, as well as to confirm the placement of each connector and jumper.

Chapter 4 BIOS Configuration Settings

This chapter introduces the key features of BIOS, including the descriptions and option keys for diverse functions. These details provide users to effortlessly navigate and configure the input/output devices.

Chapter 5 BMC Configuration Settings

This chapter illustrates the diverse functions of IPMI BMC, including the details on logging into the web page and assorted definitions. These descriptions are helpful in configuring various functions through Web GUI without entering the BIOS setup. For more information of BMC configurations, please refer to IPMI BMC (Aspeed AST2500) User's Manual for a more detailed description.

Chapter 6 Technical Support

For more information or suggestion, please contact the nearest AIC® corporation representative in your district or visit the AIC® website: https://www.aicipc.com/en/index. It is our greatest honor to provide the best service for our customers.

Chapter 1. Product Features

SB405-VL is a high density storage server that includes motherboard, chassis, power supply and disk drive. For more information about our product, please visit our website at https://www.aicipc.com/en/index.

Before removing the subsystem from the shipping carton, visually inspect the physical condition of the shipping carton. Exterior damage to the shipping carton may indicate that the contents of the carton are damaged. If any damage is found, do not remove the components; contact the dealer where the subsystem was purchased for further instructions. Before continuing, first unpack the subsystem and verify that the number of components in the shipping carton is accurate and in good condition.

1.1 Box Contents

This product contains the components listed below.

Please confirm the number and the condition of the components before installation.

Pre-installed into the system		Number
✓	2000W redundant power supply 80+ Platinum	1+1
✓	3.5-inch internal hot swap disk drive tray	102
✓	2.5-inch (7mm) internal disk drive tray	2
✓	Heat sink	2
✓	Hot swap 60x56mm fan	8
✓	Dual rotor 40x56mm fan (motherboard canister)	3
✓	AIC® Vela motherboard	1
✓	24-port 12Gb SAS backplane with 36-PHY expander and 2 x 8i SAS slimline connectors	3
✓	30-port 12Gb SAS backplane with 40-PHY expander and 2 x 8i SAS slimline connectors	1
Accessory Item		**Number**
✓	Screw for 24 x 2.5" HDD, bottom: F(+),M3x4L,NI	96
✓	Screw for 10 x 2.5" HDD, bottom: F(+),M3x4L,NI	40
✓	EPE foam for front board: 563*510*105H	1
✓	EPE foam for rear board: 563*510*105H	1
✓	EPE foam for front tray: 563*300*145H	1
✓	EPE foam for rear tray: 563*300*145H	1
✓	EPE tray for heat sink box: 470*325*100H	1
✓	EPE pad for rail: 130*100*45T	2
✓	Fan sponge for internal fan	2
✓	Power cord	vary per region
✓	41-inch tool-less slide rail assembly	1
BTO	Cable management kit	1

Product features are subject to change without notice.

1.2 Specifications

Dimensions (W x D x H)	mm : 434 x 1050 x 176		
	inches : 17.1 x 41.3 x 7		
Motherboard	AIC Server Board Vela		
Processor	Processor Support	• Intel® Xeon® Scalable Processors (Cascade Lake Refresh/Cascade Lake/Skylake) • Support CPU TDP up to 150W **Please contact AIC Technical Support for more info/details about optimized CPUs and specialized system.*	
	UPI Speeds	10.4 GT/s, 9.6 GT/s	
	Socket Type	Socket P0 (LGA-3647 Socket)	
Chipset Support	Intel® Lewisburg C620 series PCH		
System Memory	• 6 x memory channels per CPU, 2 channels with 2DPC + 4 channels with 1DPC • 16 x DIMM slots support: DDR4 2933/2666/2400MHz RDIMM/LRDIMM • Intel® Optane™ DC Persistent Memory (Apache Pass) support		
Front Panel	System power on/off, System reset, 1 x USB 2.0 Type A		
LEDs	Power status, Drive activity, System ID		
Drive Bays	Internal	3.5" hot swap	102 (Top-Loading)
		2.5" hot swap	2 (7mm, Top-Loading)
		M.2	2 x M.2(NGFF) / M-Key / 2280 / Supports SATA or PCIe x2
Backplanes	• 3 x 24-port 12Gb SAS backplanes with 36-PHY expander and 2 x 8i SAS slimline connectors • 1 x 30-port 12Gb SAS backplane with 40-PHY expander and 2 x 8i SAS Slimline connectors		
Rear I/O	LAN	1 x GbE RJ45 dedicated to BMC management	
	USB	2 x USB 3.0 Type A connectors	
	VGA	1 x external VGA port	
	Serial Port	1 x external COM port by 3.5mm phone jack	
TPM Support	2.0 onboard		
Power Supply	2000W 1+1 redundant power supply 80+ Platinum • AC Input 200-240V, 50/60Hz, 15A • Socket type: C20 (Power cord type: C19)		
System Cooling	• 3 x 40x56mm dual rotor fans (MB canister) • 8 x 60x56mm hot swap fans		

Expansion Slots	PCIe 3.0	• 2 x PCIe Gen3 slots • 1 x OCP Mezz. V2.0 supports PCIe Gen3 x16 • 1 x high-density connector supports 16 + 8 lanes of PCIe Gen3 **Please contact AIC Technical Support for more info/details about OCP card.*
System BIOS	BIOS Type	Insyde UFEI BIOS
	BIOS Features	• ACPI • PXE • WOL • AC loss recovery • IPMI KCS interface • SMBIOS • Serial console redirection • BIOS Boot Specification • BIOS Recovery Mode • SRIOV • iSCSI • TPM
On-board Devices	SATA	Intel® Lewisburg PCH on-chip solution • 2 x SATA 6.0 Gb/s (by 2 x SATA 7 pin) • 8 x SATA 6.0 Gb/s by edge slot for extension • RAID 0, 1, 5, 10 support by Intel RSTe
	BMC	Aspeed AST2500 Advanced PCIe Graphics & Remote Management Processor • Baseboard Management Controller • Intelligent Platform Interface 2.0 (IPMI 2.0) • iKVM, Media Redirection, IPMI over LAN, Serial over LAN • SMASH Support • HTML5 • Redfish
	Network Controllers	• Via OCP Mezzanine card/PCIe slots extension • Realtek RTL8211E GbE Ethernet for BMC dedicated management port
	Graphics	Aspeed AST2500 Advanced PCIe Graphics & Remote Management Processor • PCIe VGA/2D Controller • 1920x1200@60Hz 32bpp
System Management	• IPMI 2.0 • KVM over IP • Media redirection • Temperature, fan, voltage, PSU sensor monitor • System temperature • System ID / System fail indicator • Remote power on/off/reset • SEL message alarm through mail • SNMP support • Intel NM • HTML5 • Redfish	
Environmental Specifications	• Storage temperature : -10ºC(14ºF) ~ 60ºC(140ºF) • Operating temperature : 0ºC(32ºF) ~ 35ºC(95ºF) • Storage operating humidity : 5%~95% non-condensing	
Gross Weight	(w/ PSU, Rail, Pallet)	kgs : 71
		lbs : 143.7
Packaging Dimensions	(W x D x H)	mm : 643 x 1350 x 416
		inches : 25.3 x 53.1 x 16.4
Mounting	Standard	41" tool-less slide rail
	Option	Cable Management Kit

1.3 System Block Diagram

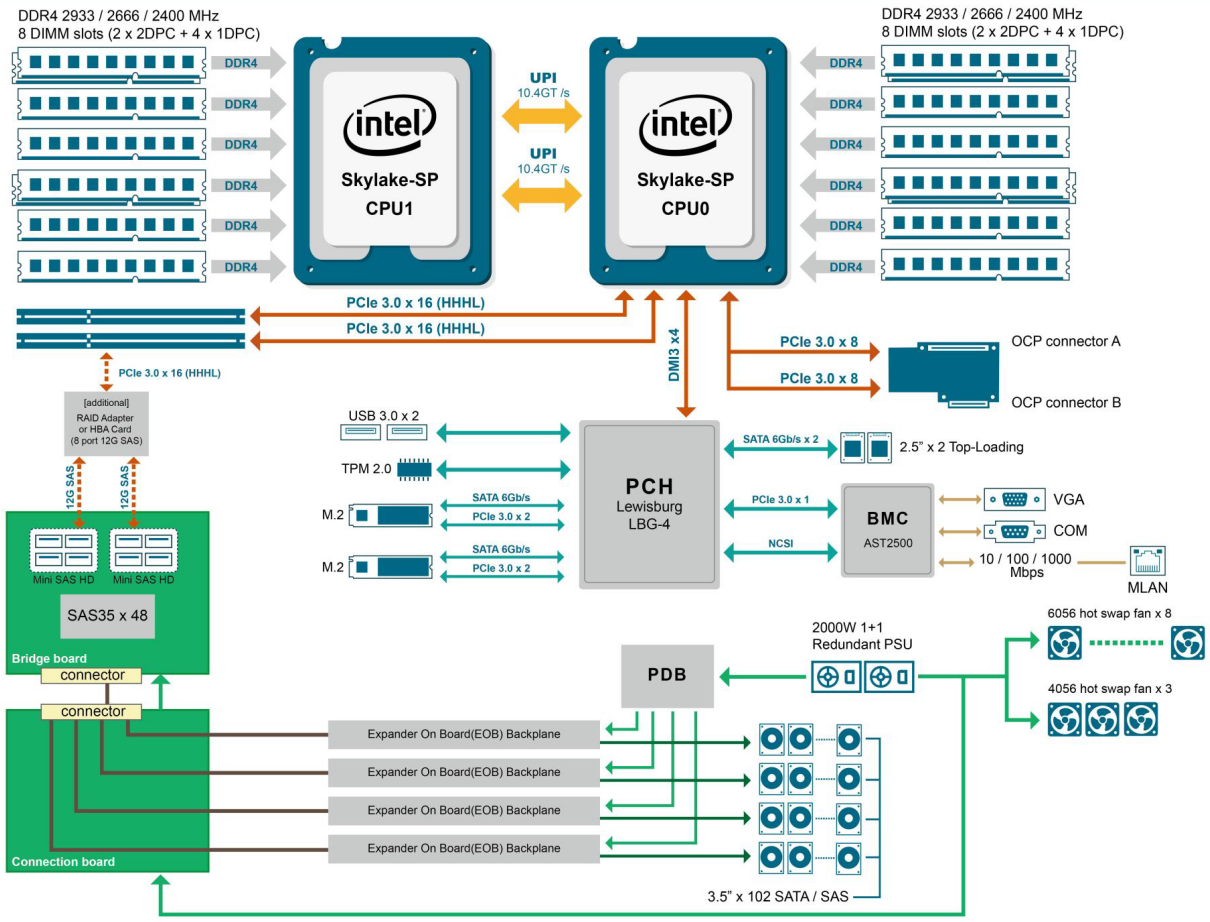

1.4 Feature

SB405-VL is a reliable 4U storage server barebone with 102 * 3.5-inch and 2 * 2.5-inch (7mm) internal hot swap disk drives. This product is designed to accommodate the AIC®-patented serverboard, Vela, which supports two Intel® Xeon® Scalable Processors (Cascade Lake Refresh/Cascade Lake/Skylake) and 16 DDR4 DIMM to offer greater perfomance, efficiency and utility for our customers. Featuring Intel® C620 Series Chipset, which is emphasized for its accelerated speed and expansion, this product enhances these advantages by integrating flexible I/O usage and system expansion into to provide greater bandwidth and utilization.

In addition to the noteworthy features of the barebone, SB405-VL provides immediate and efficient management with Onboard Baseboard Management Controller and greater I/O extension. Featuring IPMI 2.0 and Aspeed AST2500 Advanced PCIe Graphics, the server board offers support for iKVM, Media Redirection, Smash Support, IPMI over LAN and Serial over LAN.

- 4U ultra density storage server supports 102 hot swap 3.5" SAS drive bays
- Support 2nd Gen. Intel® Xeon® Scalable Processors (Cascade Lake Refresh/ Cascade Lake/Skylake)
- Flexible I/O usage with Max IO® to support up to 1 OCP x16 Mezzaine cared V2.0
- Onboard Baseboard Management Controller for system management and IPMI control
- Front to back airflow and hot swap redundant fans to provide optimal thermal conditions
- Customizable to meet OEM/ODM requirements
- Cable Arm Management on rack (BTO)

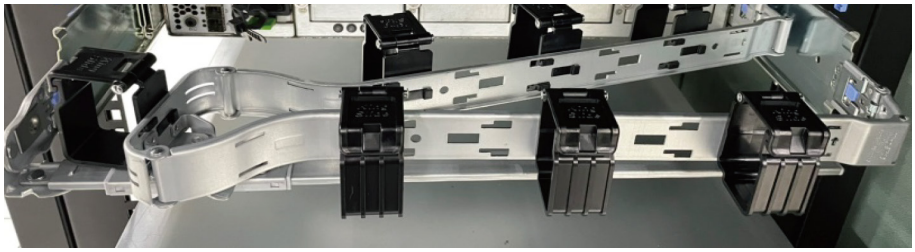

Cable Arm Management

Front Panel

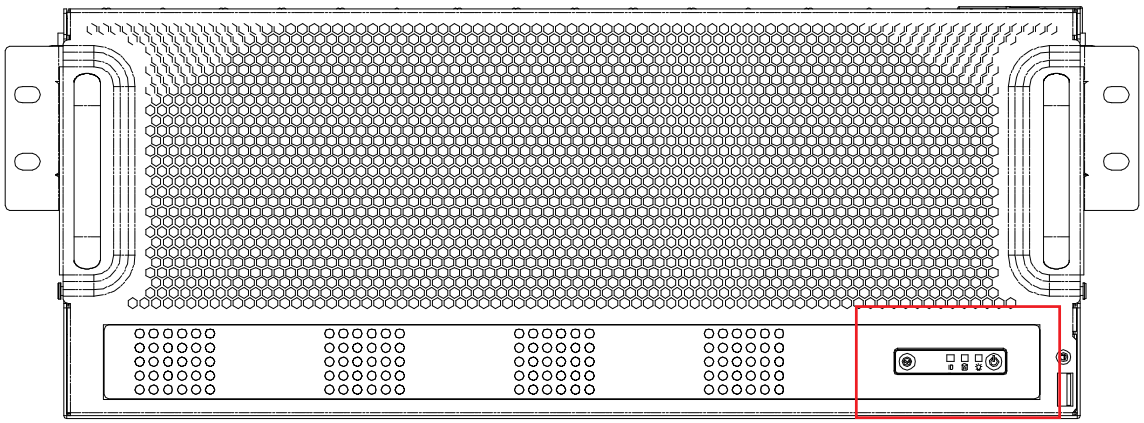

Item	Description	Item	Description
	Power Button		ID LED
	Power Status LED		System Reset
	Drive Activity LED		

Rear Panel

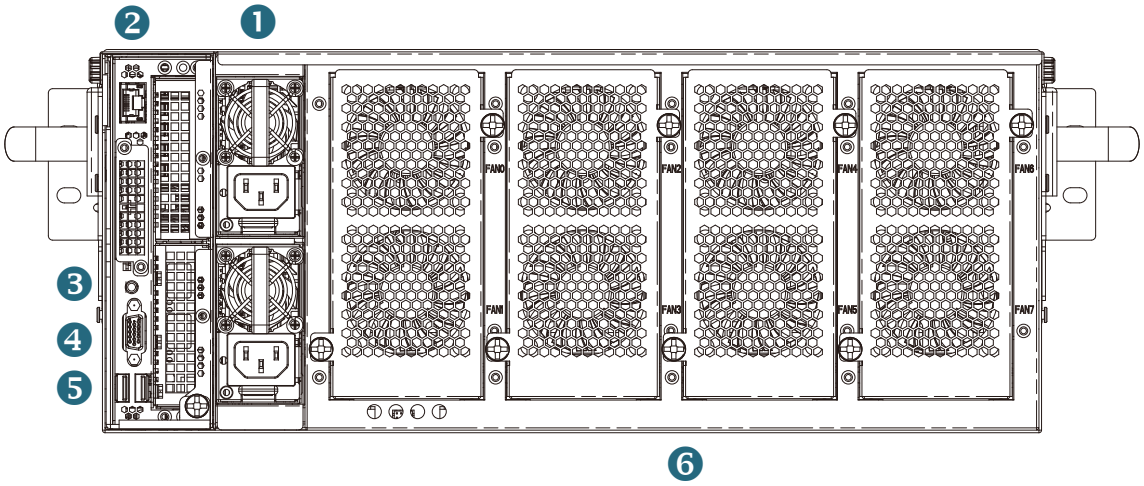

Item	Content	Description
1	PSU socket	2000W 1+1 redundant power supply 80+ Platinum • AC INPUT : 200~240V,50/60Hz,15A • Socket type: C20 (Power cord type: C19)
2	LAN port	1 GbE RJ45 dedicated to BMC management
3	Serial port	1 external 3.5mm phone jack for COM port
4	VGA port	1 external DB-15 VGA port
5	USB port	2 USB 3.0 Type A
6	Fan	8 x 60x56mm hotswap fans

Top View

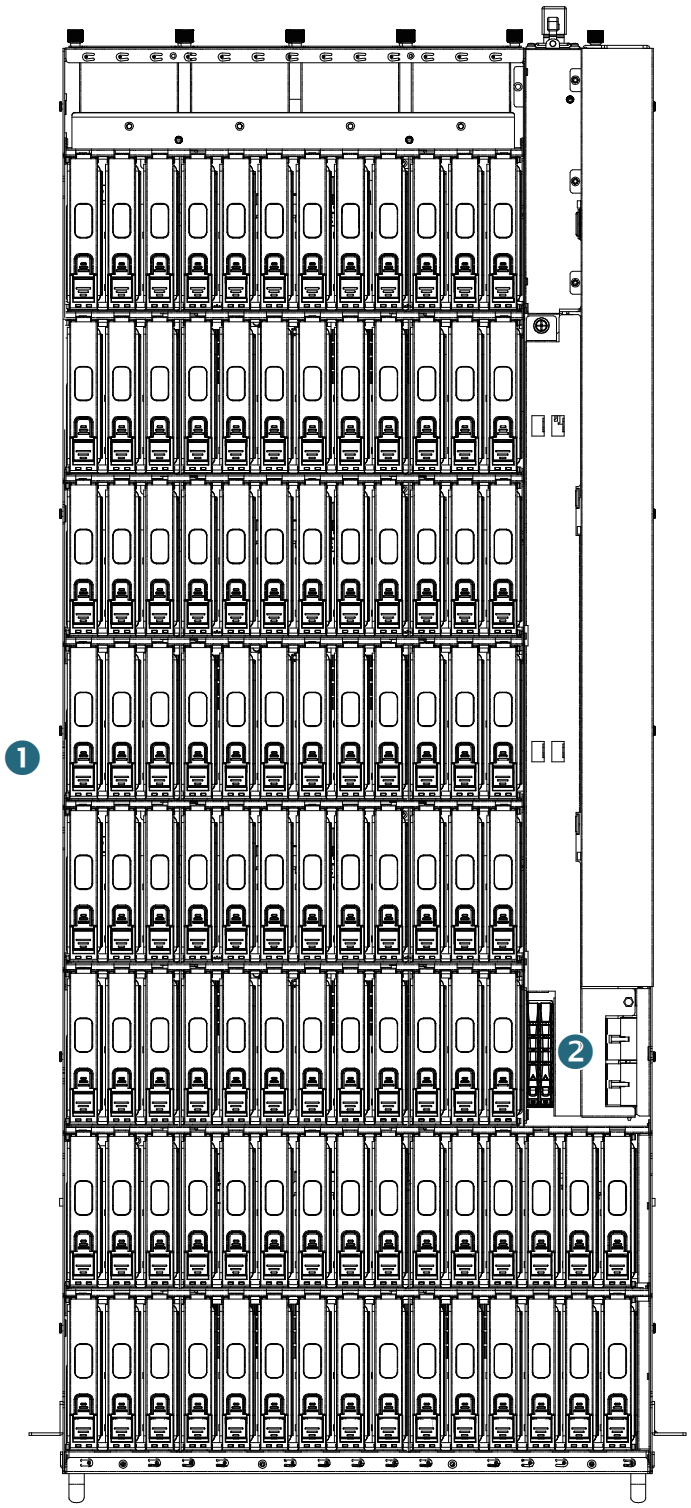

Item	Content	Description
1	3.5-inch disk drive bays	102 x 3.5-inch hotswap disk drive
2	2.5-inch disk drive bay	2 x 2.5-inch hot swap disk drive

Chapter 2. Hardware Setup

This section describes a simple instruction guide for installing the hardware components on the serverboard system. Turn off and unplug all system and peripheral devices before proceeding.

2.1 Central Processing Unit

The serverboard supports dual Xeon scalable processors and Socket P0 (LGA-3647).

2.1.1 Processor Installation

To ensure a safe and easy setup, you need to prepare before installation:

☑ a T20 Torx screwdriver
☑ ESD wrist strap/mat and conductive foam pad

CAUTION
The pins of the processor socket are vulerable and easily susceptible to damage if fingers or any foreign objects are pressed against them. Please keep the socket protective cover on when the processor is not installed.

CAUTION
When unpacking a processor, hold the processor only by its edges to avoid touching the contacts.

Standard Processor Assembly:
A standard processor assembly is comprised of PHM(Processor Heat sink Module) components and processor socket assembly.

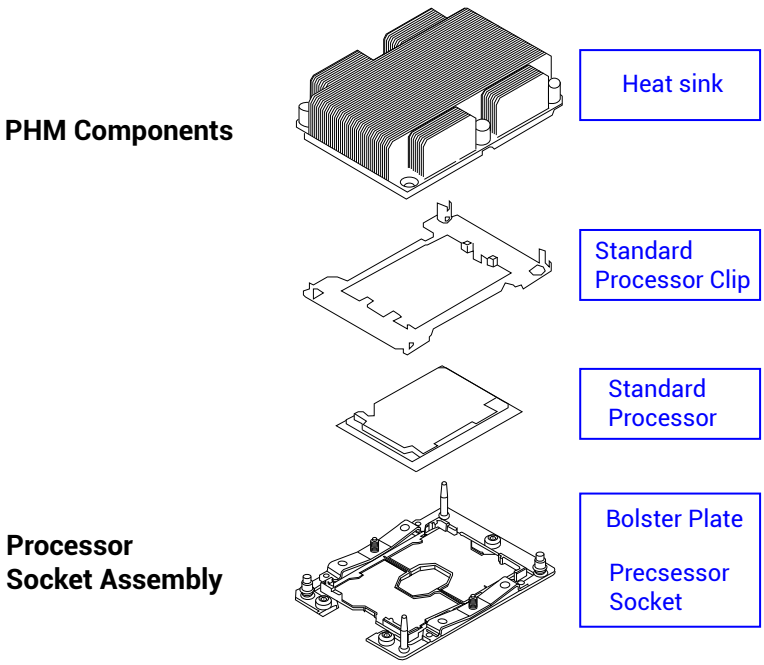

Processor Socker Assembly:

The server board includes two processor sockets (LGA-3647), supports two Intel® Xeon® Processor Scalable Family and has a Thermal Design Power (TDP) of up to 165W on selected models.

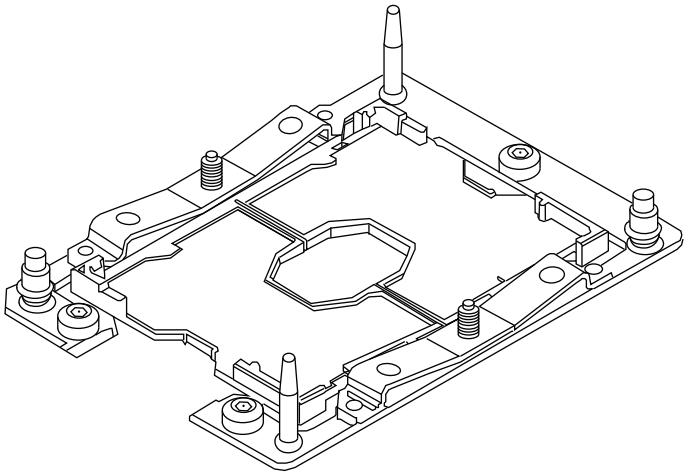

PHM (Processor Heat sink Module) Component:

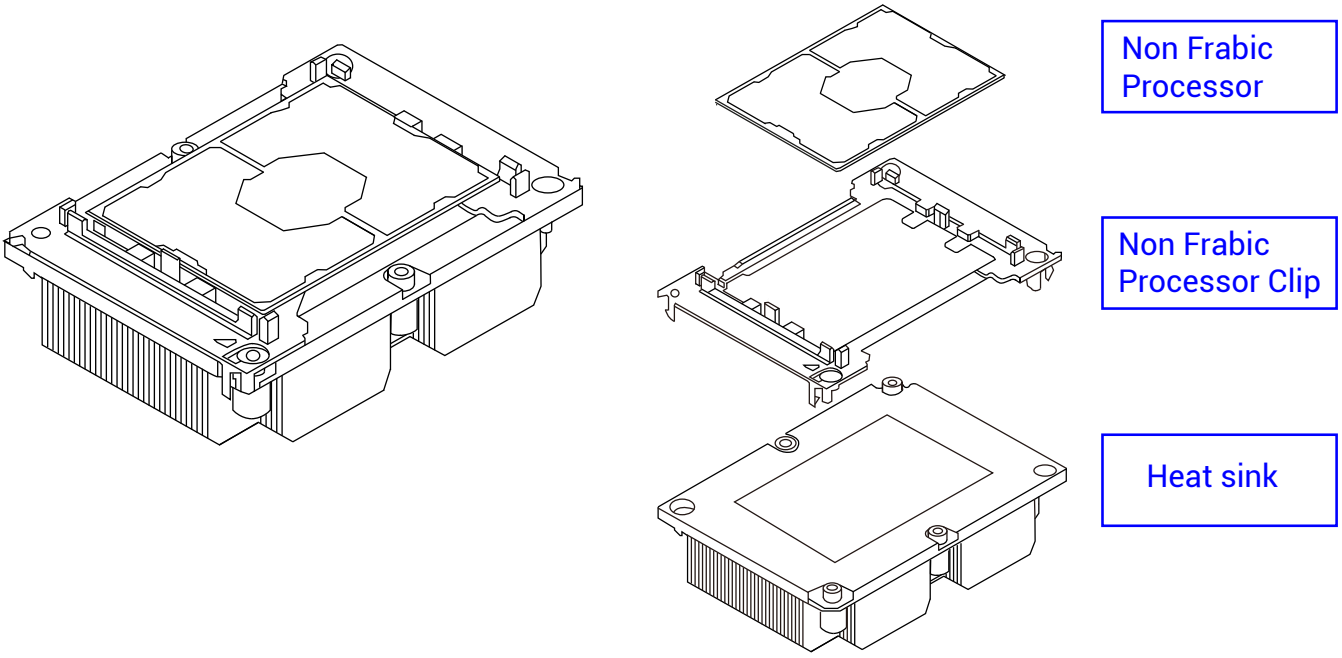

PHM Screw Installation Order:
The PHM sits level with the processor socket assembly. The PHM is NOT installed properly if it does not sit level with the processor socket assembly. Once the PHM is seated over the processor socket assembly, the four heat sink torque screws must be secured in the following order as shown below.

Processor Heat Sink – Top View with Screw Tightening Order

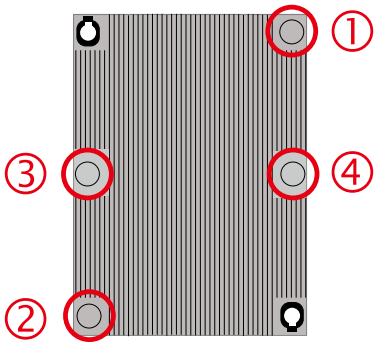

CAUTION
Failure to tighten the heat sink screws in the specified order may cause damage to the processor socket assembly. Heat sink screws should be tighted to 12 in-lbs torque according to the ndicated order on the top of the heat sink label.

2.1.2 Heatsink Placement

Position the heatsinks over the CPU0 and CPU1 and align the screws on the heatsink with the screw holes on the motherboard.

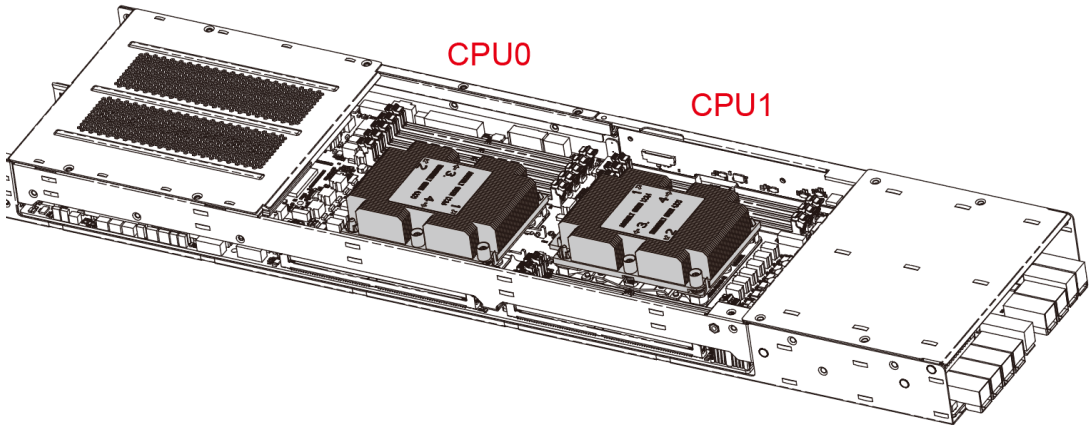

CAUTION
Avoid moving the heatsink after it has contacted the top of the CPU. Too much movement could disturb the layer of thermal compound, causing voids and leading to ineffective heat disspation and component damage.

This information is provided for professional technicians only.

2.2 System Memory

2.2.1 DIMM Placement

The DIMMs are displayed on the Vela board as JDIMMC0/ JDIMMB0/ JDIMMA0/JDIMMD0/JDIMME1/ JDIMME0/JDIMMF1/JDIMMF0/ JDIMML0/JDIMMK0/ JDIMMK1/ JDIMMJ0/JDIMMJ1/ JDIMMG0/ JDIMMH0/JDIMMI0.

To ensure satisfactory performance, you need to:

☑ Verify the DIMM type:
This product supports DDR4 RDIMM/LRDIMM with EEC (Error Correction Code).

☑ Verify if all of the DIMMs installed are of the same DIMM type to avoid memory failure and loss of performance speed.

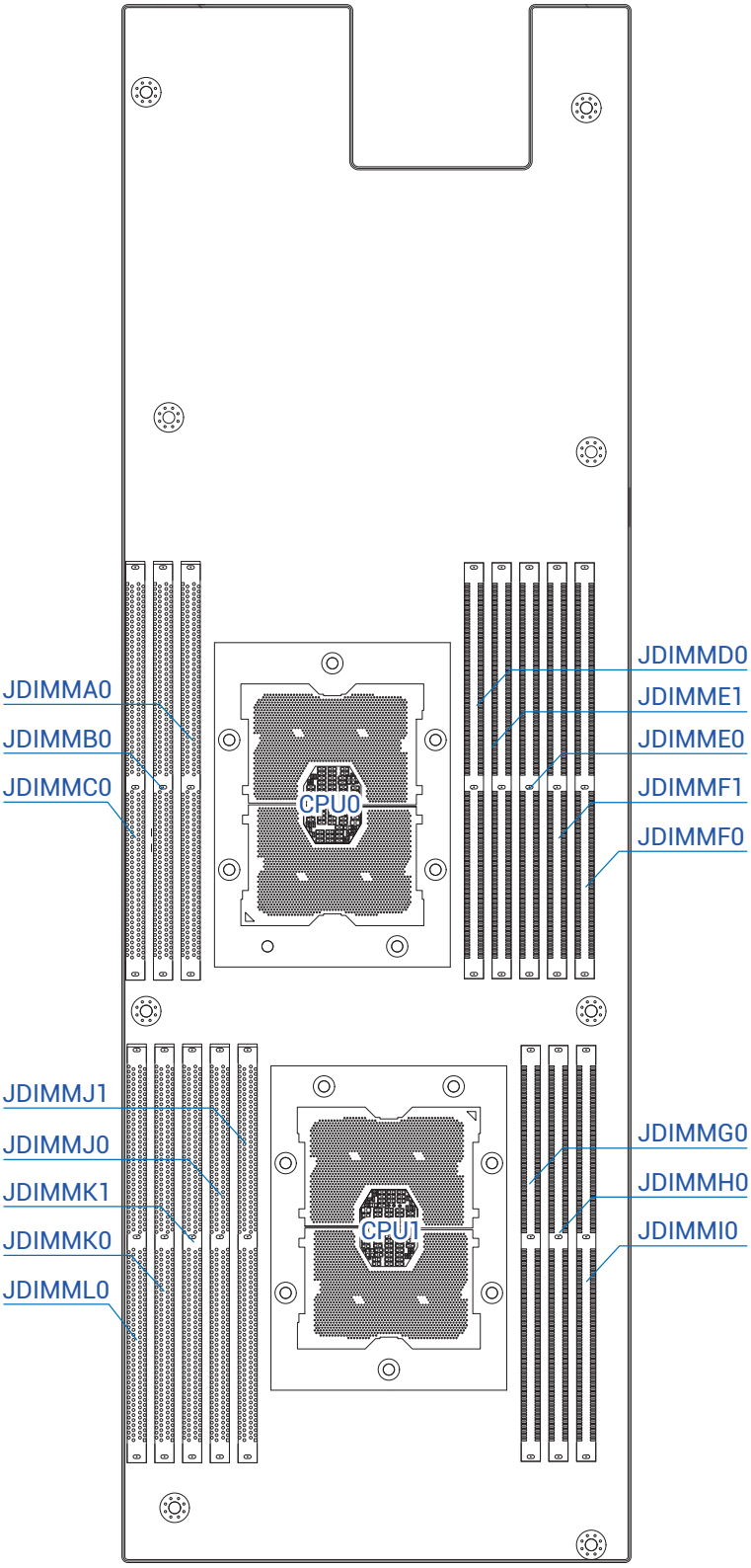

2.2.2 DIMM Population

DIMM Number	DIMM Arrangement	
2 DIMMs	CPU0	CPU1
	JDIMMC0	JDIMMI0

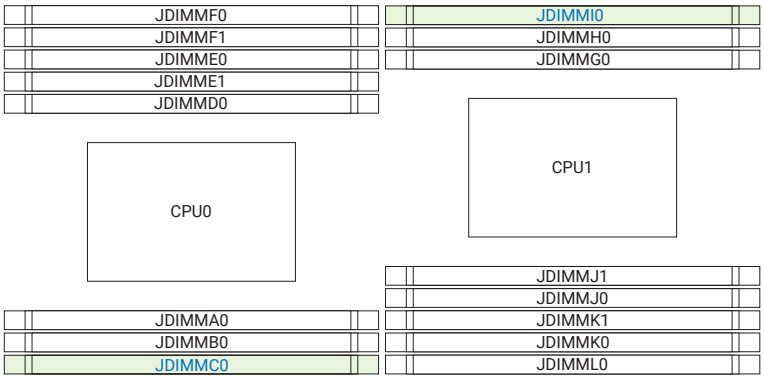

DIMM Number	DIMM Arrangement	
4 DIMMs	CPU0	CPU1
	JDIMMC0	JDIMMI0
	JDIMMB0	JDIMMH0

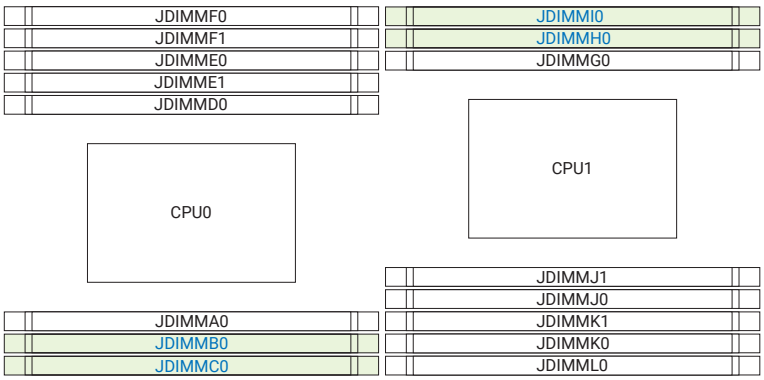

DIMM Number	DIMM Arrangement	
6 DIMMs	CPU0	CPU1
	JDIMMC0	JDIMMI0
	JDIMMB0	JDIMMH0
	JDIMMA0	JDIMMG0

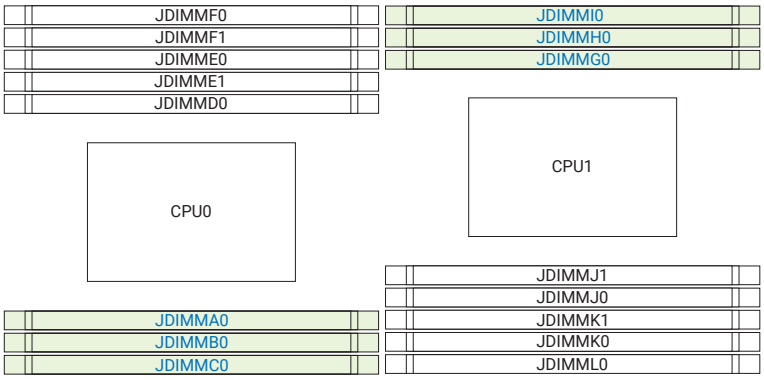

DIMM Number	DIMM Arrangement	
8 DIMMs	CPU0	CPU1
	JDIMMC0	JDIMMI0
	JDIMMB0	JDIMMH0
	JDIMMA0	JDIMMG0
	JDIMMF0	JDIMML0

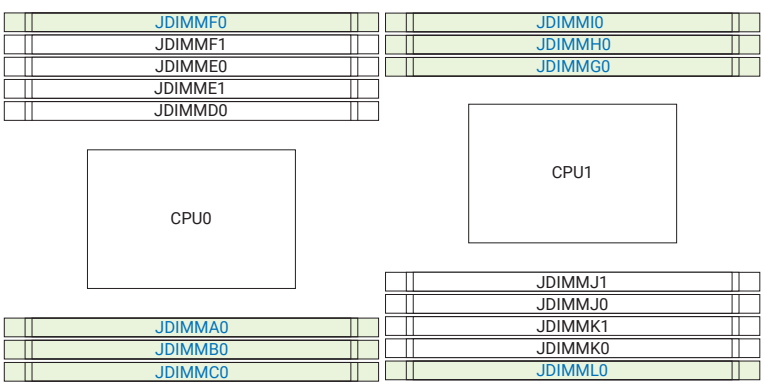

DIMM Number	DIMM Arrangement	
10 DIMMs	CPU0	CPU1
	JDIMMC0	JDIMMI0
	JDIMMB0	JDIMMH0
	JDIMMA0	JDIMMG0
	JDIMMF0	JDIMML0
	JDIMME0	JDIMMK0

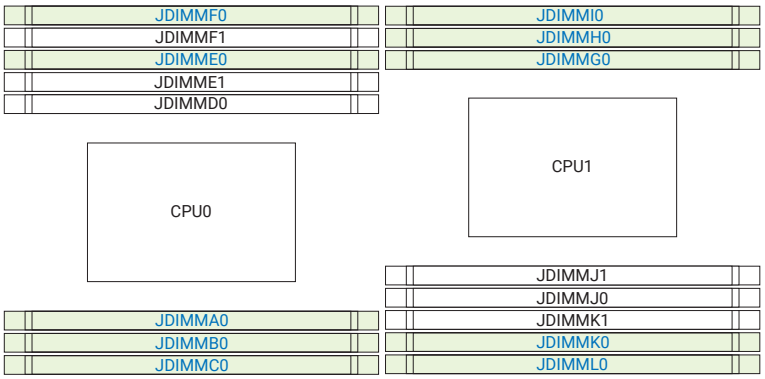

DIMM Number	DIMM Arrangement	
12 DIMMs	CPU0	CPU1
	JDIMMC0	JDIMMI0
	JDIMMB0	JDIMMH0
	JDIMMA0	JDIMMG0
	JDIMMF0	JDIMML0
	JDIMME0	JDIMMK0
	JDIMMD0	JDIMMJ0

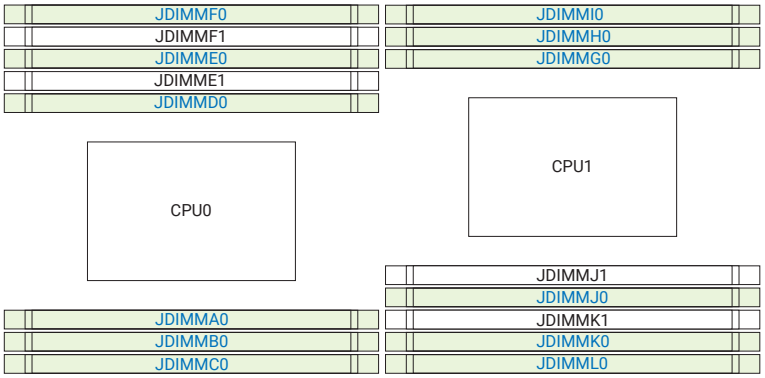

DIMM Number	DIMM Arrangement	
14 DIMMs	CPU0	CPU1
	JDIMMC0	JDIMMI0
	JDIMMB0	JDIMMH0
	JDIMMA0	JDIMMG0
	JDIMMF0	JDIMML0
	JDIMME0	JDIMMK0
	JDIMMD0	JDIMMJ0
	JDIMMF1	JDIMMK1

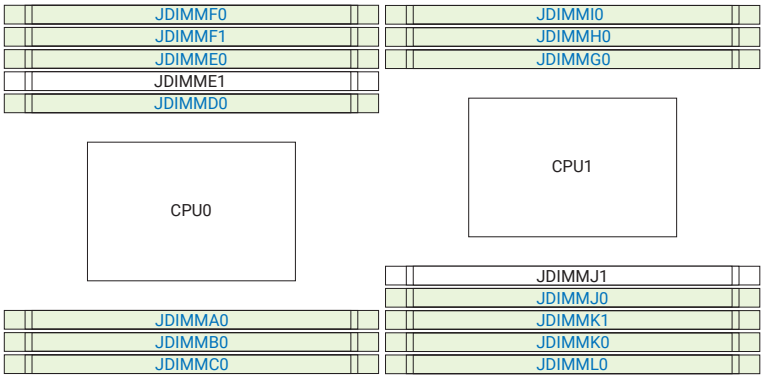

DIMM Number	DIMM Arrangement	
16 DIMMs	CPU0	CPU1
	JDIMMC0	JDIMMI0
	JDIMMB0	JDIMMH0
	JDIMMA0	JDIMMG0
	JDIMMF0	JDIMML0
	JDIMME0	JDIMMK0
	JDIMMD0	JDIMMJ0
	JDIMMF1	JDIMMK1
	JDIMME1	JDIMMJ1

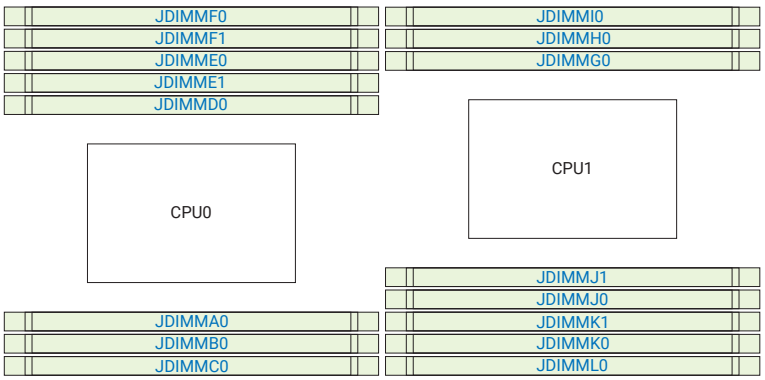

2.2.3 DCPMM DIMM Population

CPU0								
DIMM	JDIMMF0	JDIMMF1	JDIMME0	JDIMME1	JDIMMD0	JDIMMA0	JDIMMB0	JDIMMC0
App Direct Mode	DCPMM	DRAM1	DCPMM	DRAM1	DRAM1	DCPMM	DRAM1	DRAM1
Memory Mode	DCPMM	DRAM2	DCPMM	DRAM2	DRAM2	DCPMM	DRAM2	DRAM2
Mixed Memory Mode	DCPMM	DRAM3	DCPMM	DRAM3	DRAM3	DCPMM	DRAM3	DRAM3
App Direct Mode	DCPMM	DRAM1	DCPMM	DRAM1	DRAM1	DCPMM	DRAM1	DRAM1
Memory Mode	DCPMM	DRAM2	DCPMM	DRAM2	DRAM2	DCPMM	DRAM2	DRAM2
Mixed Memory Mode	DCPMM	DRAM3	DCPMM	DRAM3	DRAM3	DCPMM	DRAM3	DRAM3

CPU1								
DIMM	JDIMMK0	JDIMMK1	JDIMMJ0	JDIMMJ1	JDIMML0	JDIMMG0	JDIMMH0	JDIMMI0
App Direct Mode	-	-		-	-	-	-	
Memory Mode	-	-		-	-	-	-	
Mixed Memory Mode	-	-		-	-	-	-	
App Direct Mode	DCPMM	DRAM1	DCPMM	DRAM1	DCPMM	DRAM1	DRAM1	DRAM1
Memory Mode	DCPMM	DRAM2	DCPMM	DRAM2	DCPMM	DRAM2	DRAM2	DRAM2
Mixed Memory Mode	DCPMM	DRAM3	DCPMM	DRAM3	DCPMM	DRAM3	DRAM3	DRAM3

NOTE

DIMM Type	RDIMM	3DS RDIMM	LRDIMM	3DS LRDIMM	Capacity
DRAM1	✓	✓	✓	✓	Any Capacity
DRAM2	✓	✓	✓	✓	≥32GB
DRAM3	✓	✓	✓		Any Capacity
DCPMM	Any Capacity (Uniformly for all channels for system configuration)				

NOTE

Please abide to the DCPMM population rules listed below for your system to function accordingly.

- There is only a maximun of 1 DCPMM in each channel.
- Populate DCPMM DIMM on IMC0 before IMC1.

2.2.4 DIMM Installation

① Unlock the DIMM socket by pressing the retaining clips outward.

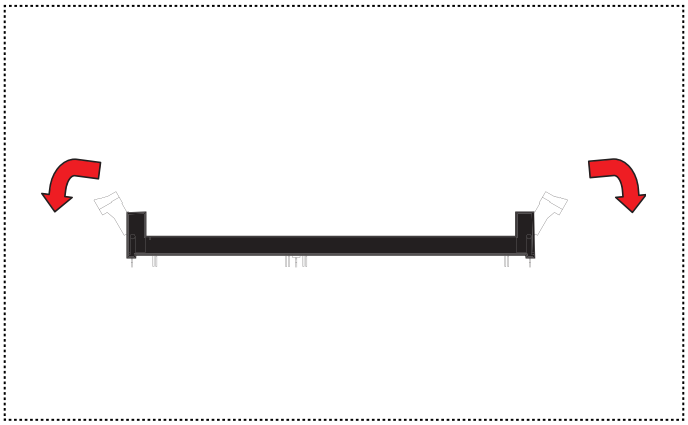

② Insert the memory module into the slot. Make sure that the DIMM notch is accurately positioned.

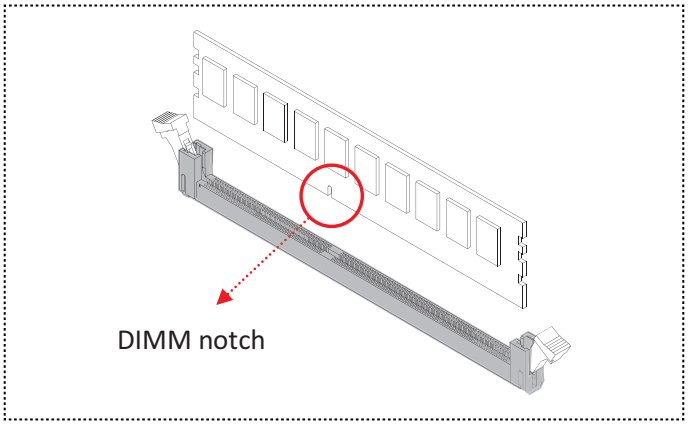

③ Close the retaining clips to complete installation.

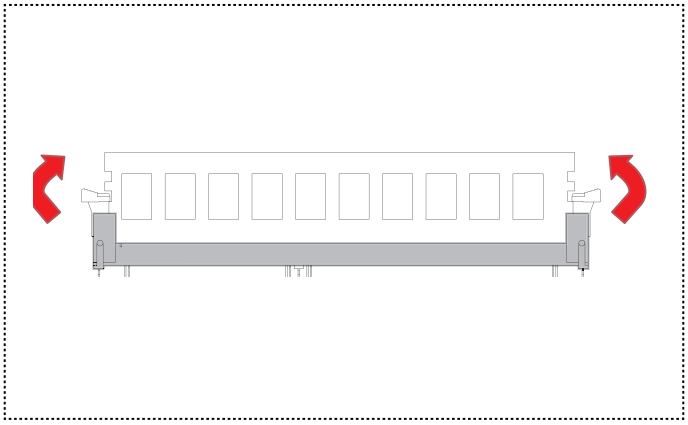

2.3 Top Cover

The server consists of four top covers: cover A, B, C & D.

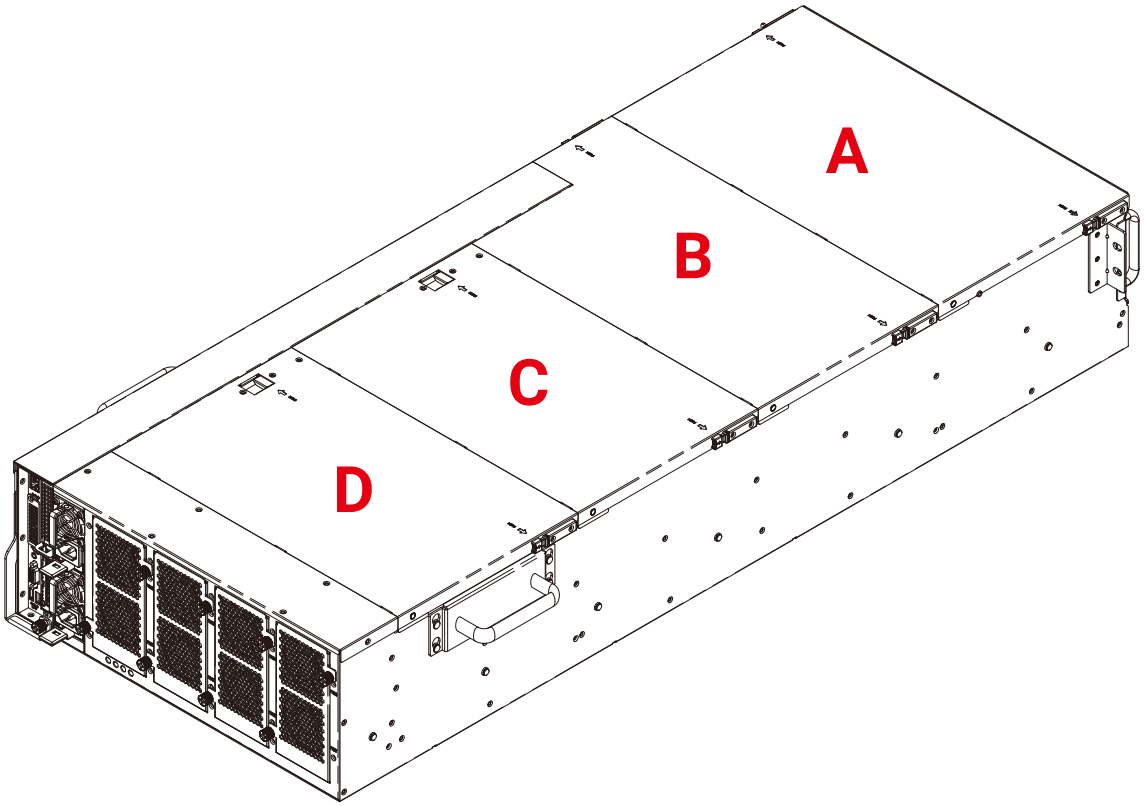

This information is provided for professional technicians only.

① Press the eject button on both sides of the top cover simultaneously to release the cover from the chassis.
② Lift upward to remove the cover.

Top Cover A & B

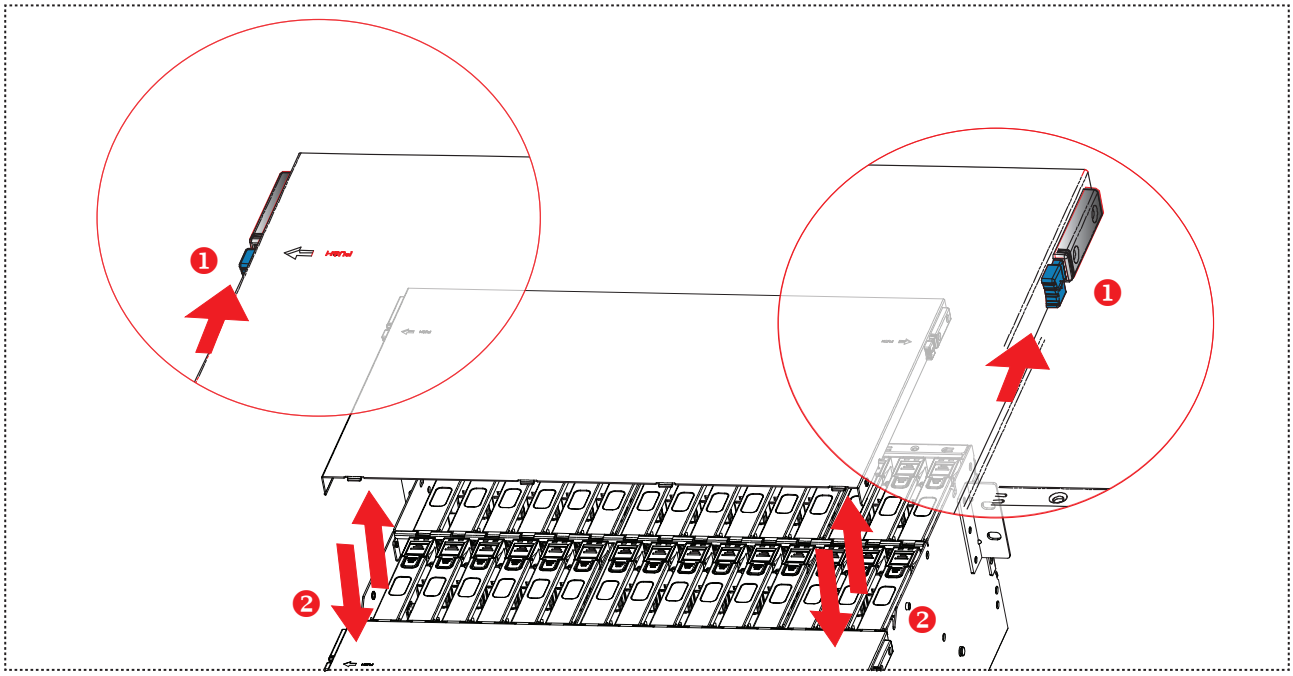

Top Cover C & D

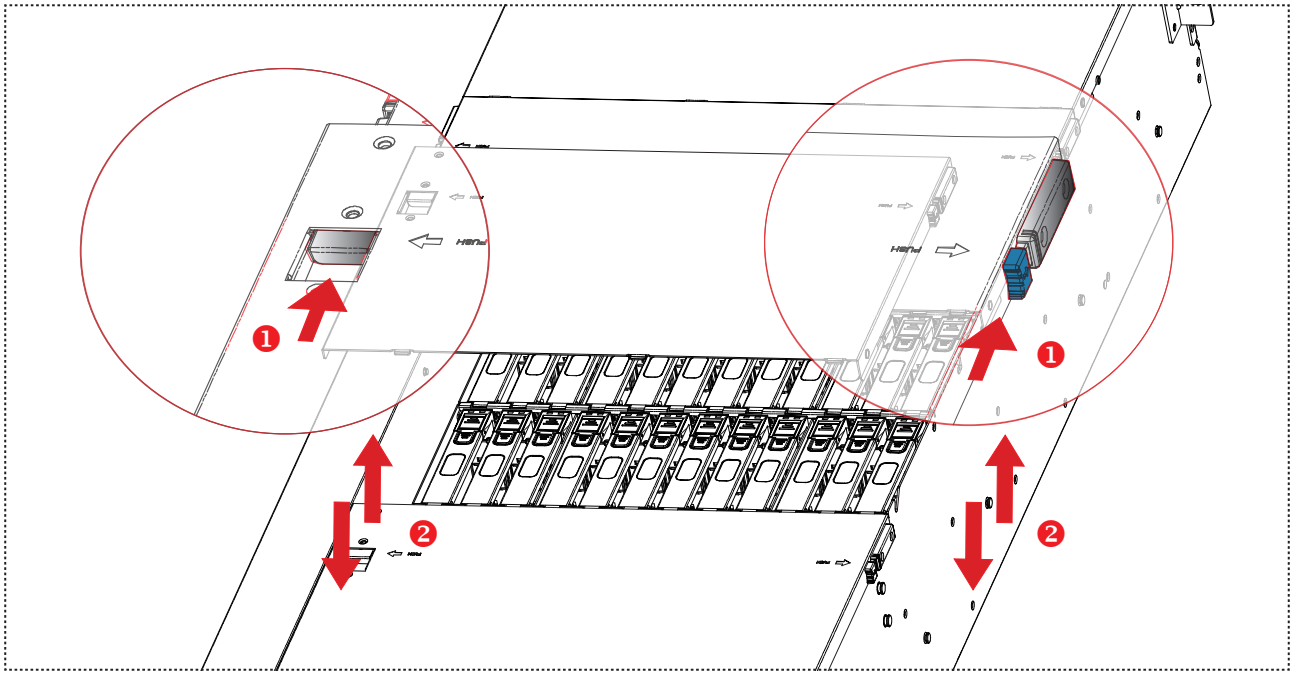

This information is provided for professional technicians only.

2.4 Motherboard

① Unscrew the captive screw to release the handle.
② Pull the handle to remove the mothermoard canister.
③ Replace the motherboard.

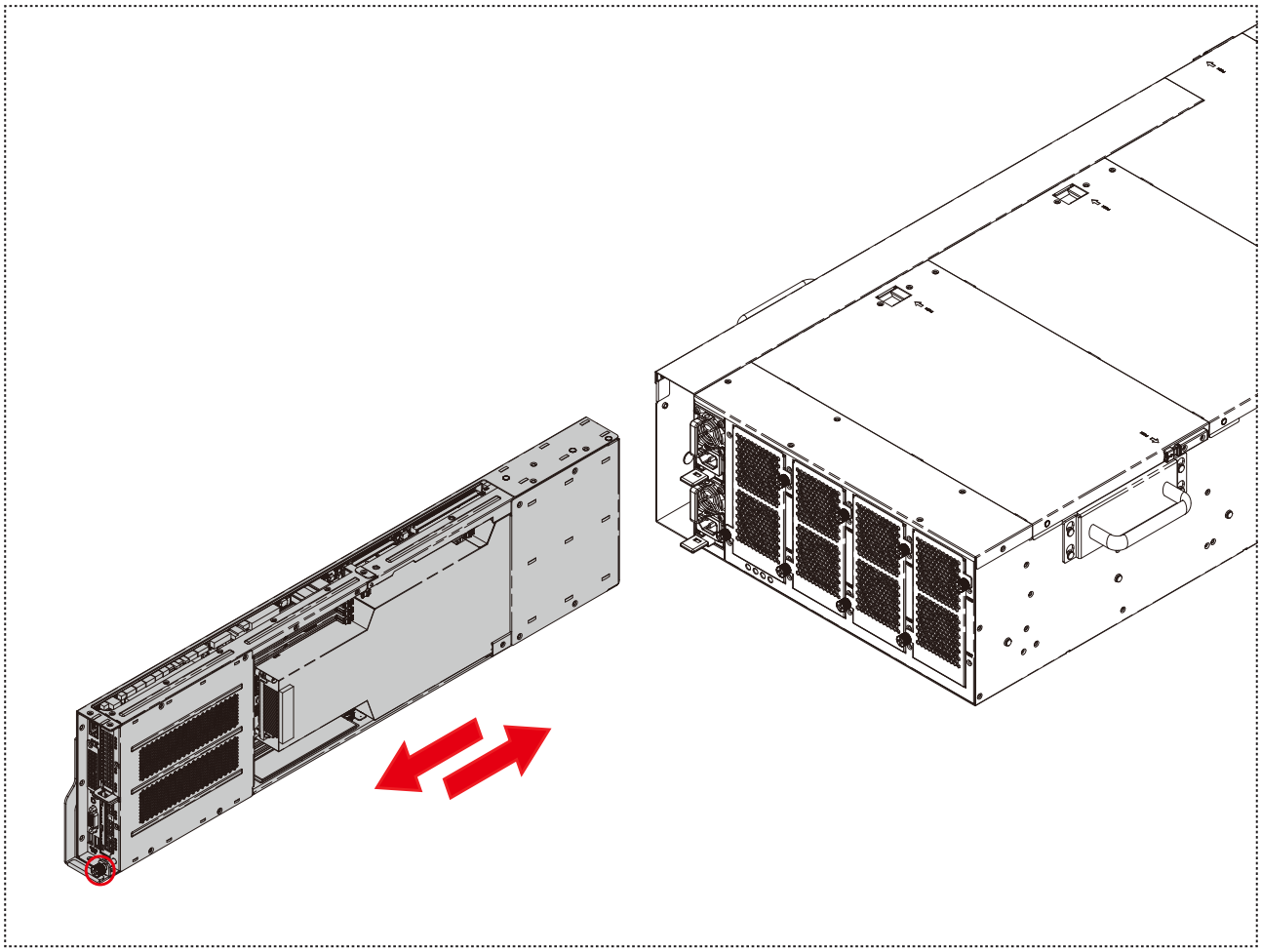

This information is provided for professional technicians only.

2.5 Power Supply Unit

① Press the ejector to release the module.
② Pull the handle to remove the module out of the chassis.
③ Push the replaced power supply unit into the chassis. Ensure that the module is hooked into the cage.

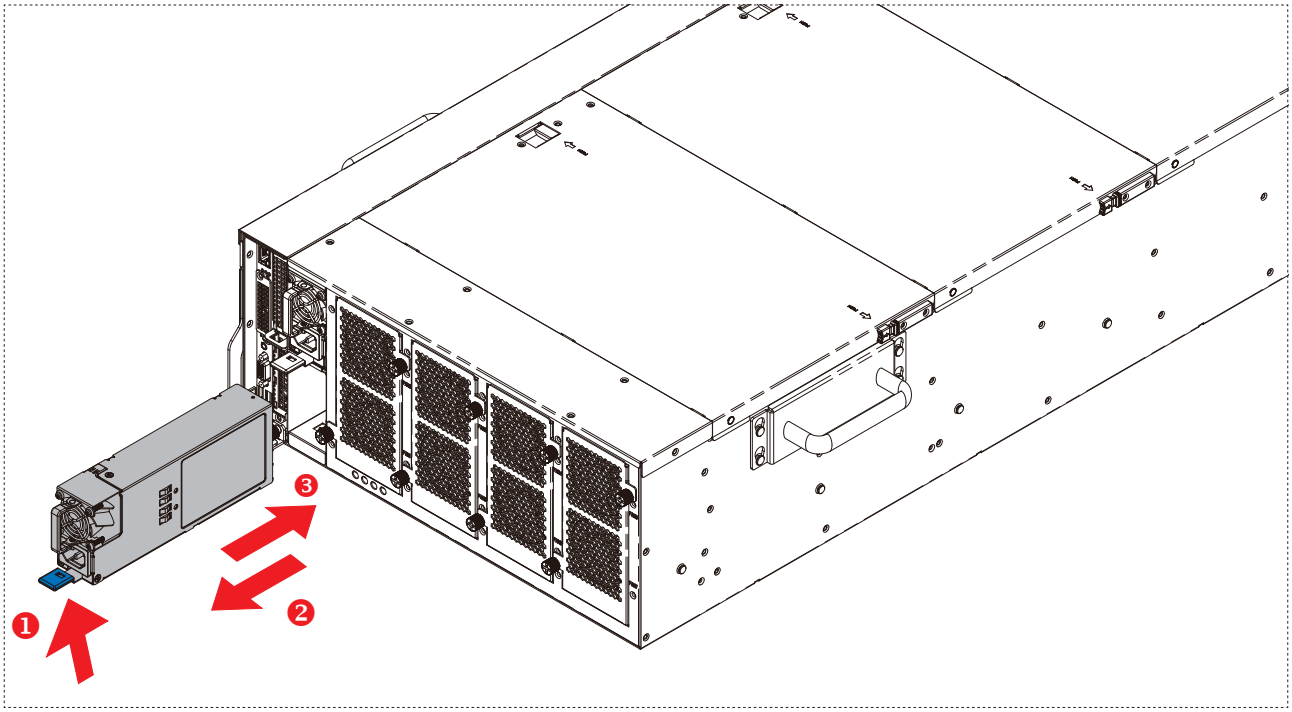

This information is provided for professional technicians only.

2.6 Fan

2.6.1 External Fan

① Unscrew the captive screw *2 on the fan module.
② Pull the fan out of the chassis.
③ Replace the fan.

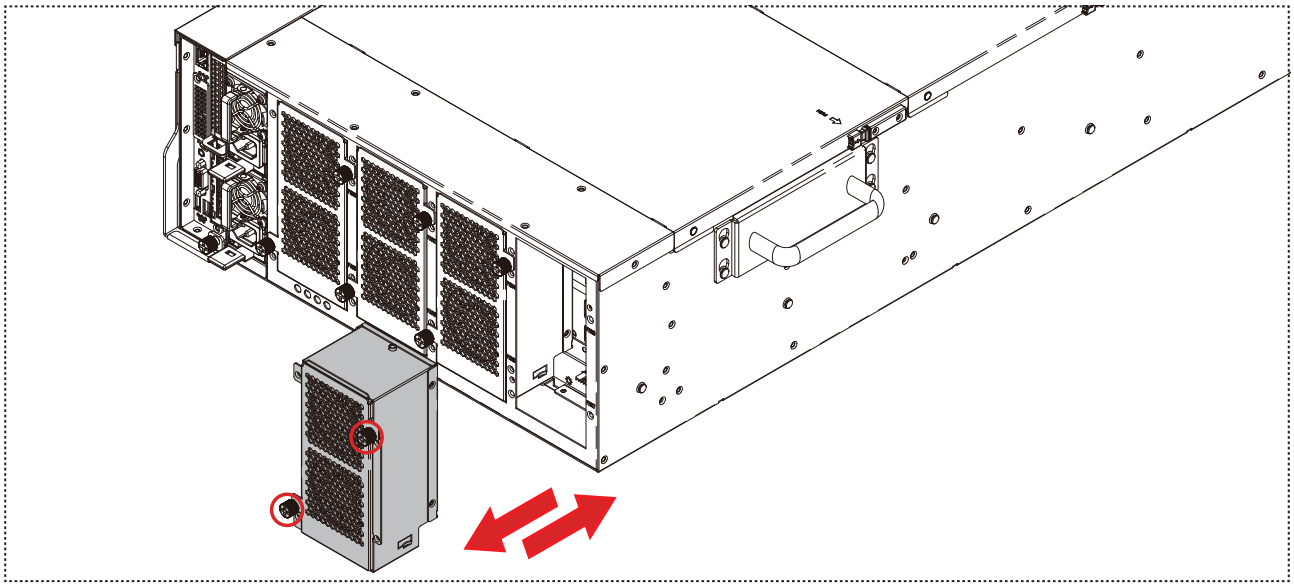

2.6.2 Internal Fan

① Remove the top cover by dislodging the screws *4.
② Remove the fan by dislodging the screws *6.
③ Peel the plastic sticker and attach the sponge onto the replaced fan on both sides.
④ Align insert the fan with the attached sponge into the chassis.

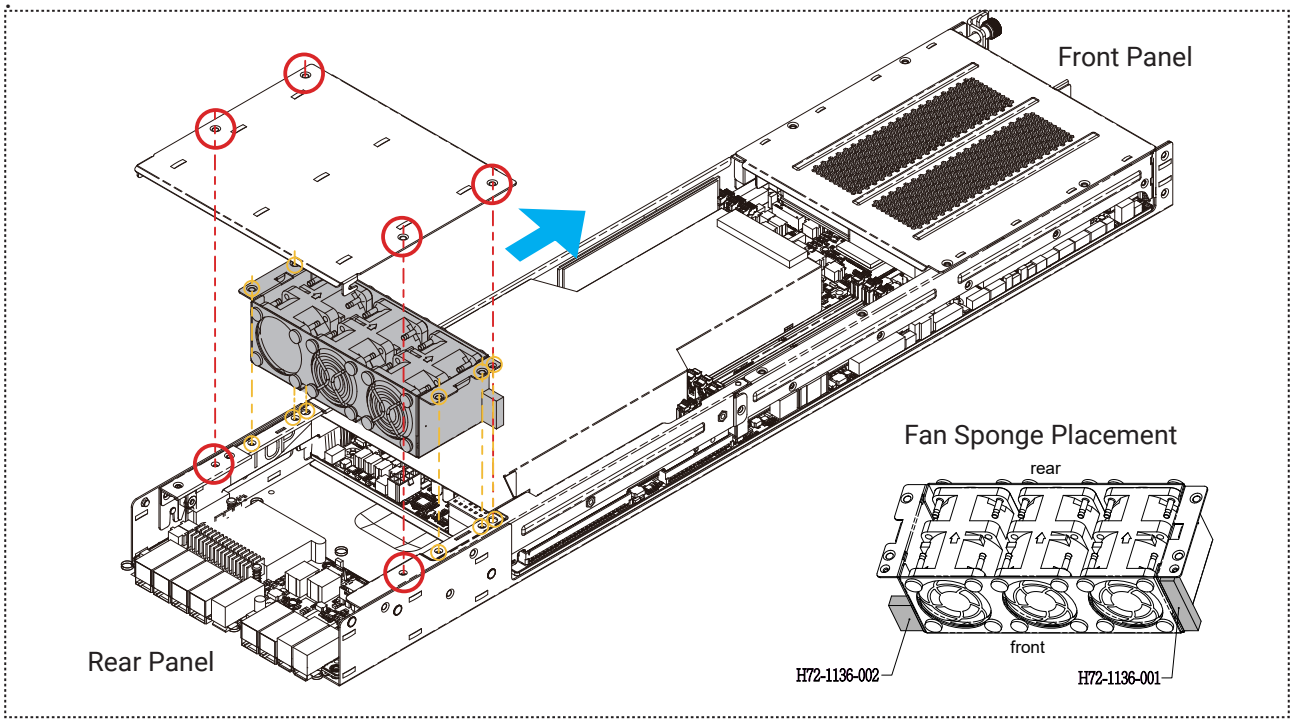

This information is provided for professional technicians only.

2.7 Internal Disk Drive

2.7.1 Disk Drive: 2.5-inch

① Remove the top cover from the chassis. Please refer to Section 2.3 Top Cover.
② Press the ejector on the drive tray to release the handle.
③ Pull the drive tray outward completely.
④ Pull the tray out of the chassis.

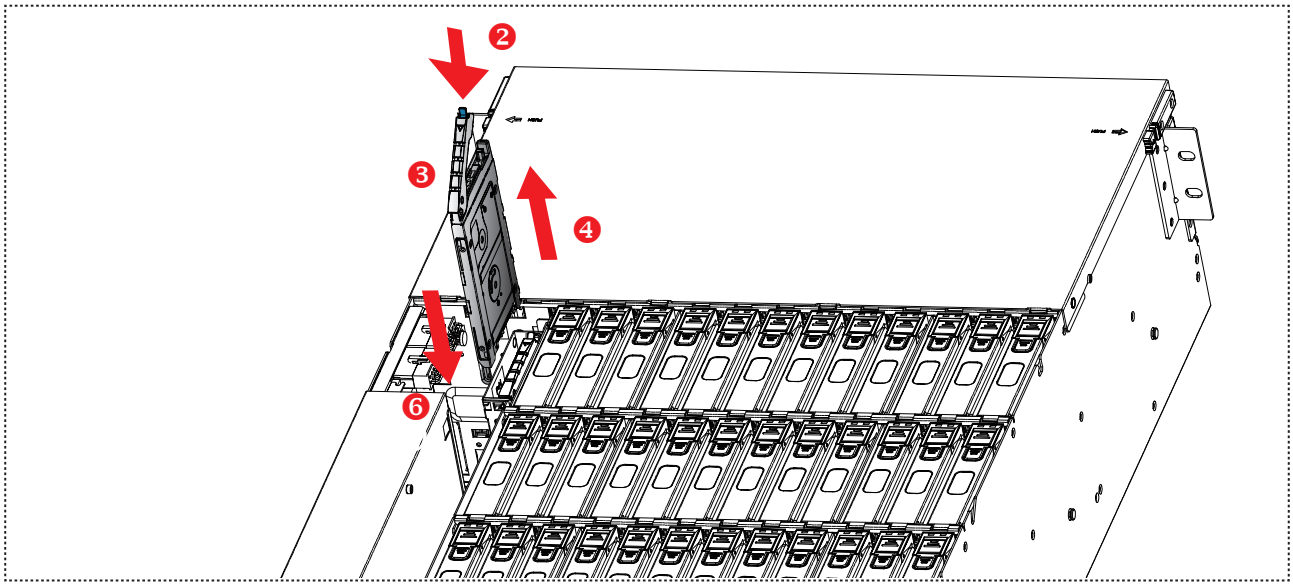

⑤ Insert the disk drive into the tray. Ensure that the dimples * 4 on the tray match the disk drive. For additional assurance, fasten the screws * 4 on the tray to secure the disk drive.

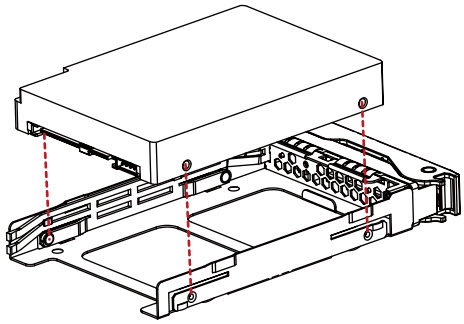

2.5" dimple placement

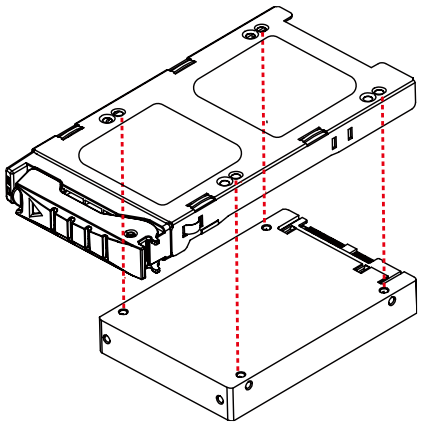

2.5" screw placement

⑥ Push the tray with the installed disk drive into the end of the drive slot in the chassis.
⑦ Close the tray handle.

2.7.2 Disk Drive: 3.5-inch

① Remove the top cover from the chassis. Please refer to Section 2.3 Top Cover.
② Press the ejector on the drive tray to release the handle.
③ Pull the drive tray outward completely.
④ Pull the tray out of the chassis.

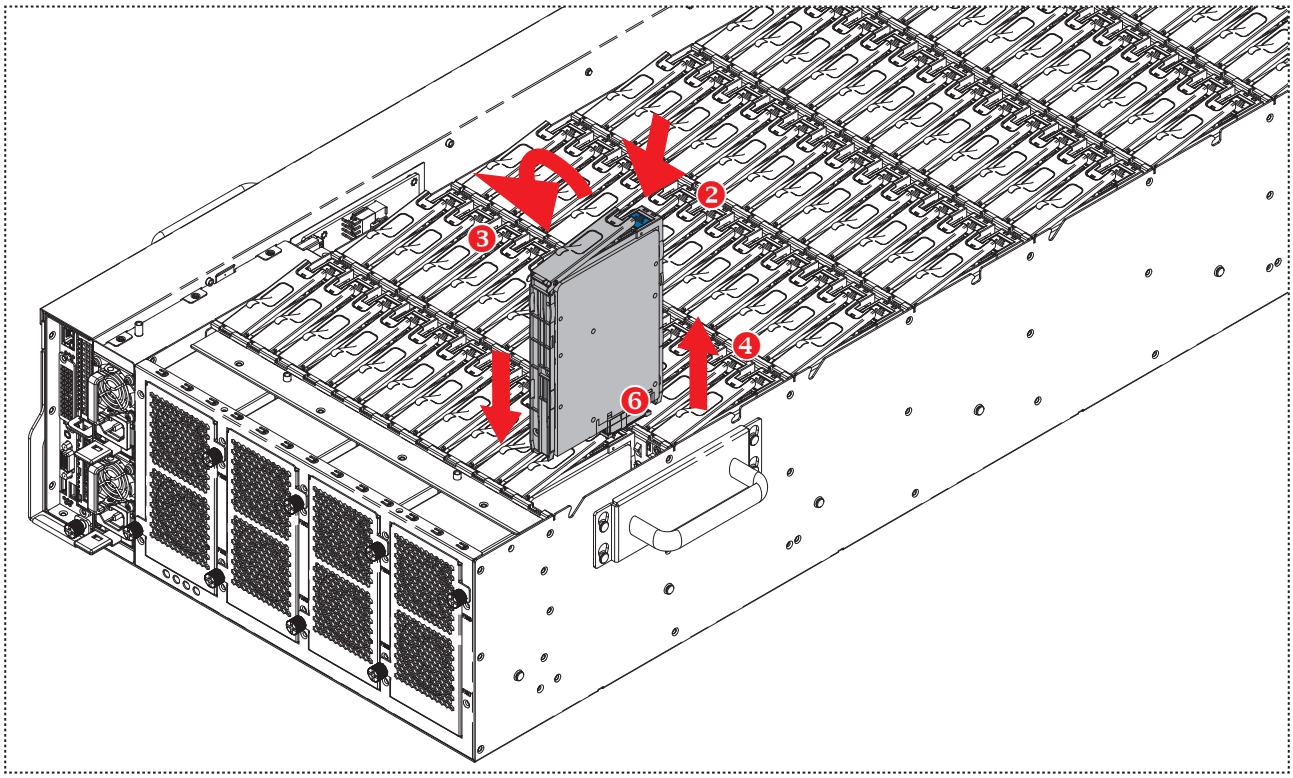

⑥ Insert the HDD into the tool-less tray in the suggested order below. Take caution to attach the side of the tray with the larger dimples to the HDD first and the side with the smaller dimples last for easier installation.

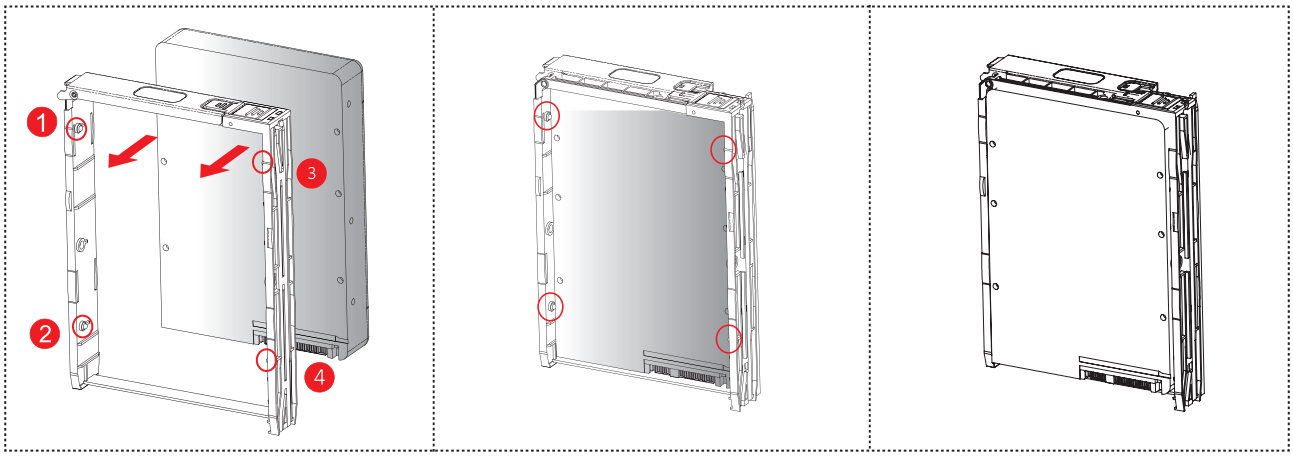

⑥ Push the tray with the installed disk drive into the end of the drive slot in the chassis.
⑦ Close the tray handle.

This information is provided for professional technicians only.

2.7.3 LED Indicator

HDD Activity	Blue (On)	HDD present
	Blue (Blinking)	HDD Activity is detected : 8Hz
		HDD Locate : 0.5Hz
	Off	HDD is not connected or Power is off.
HDD Fault Status	Red (On)	Set by any of the following bits: 1. RQST MISSING 2. RQST FAULT
	Red (Blinking)	Set by any of the following bits: 1. RQST CONS CHECK 2. RQST IN CRIT ARRAY 3. RQST IN FAILED ARRAY 4. RQST REBUILD/REMAP 5. RQST R/R ABORT 6. RQST INSERT 7. RQST REMOVE 8. PRDFAIL
	Off	No control bit is set or set by any of the following bits: 1. RQST OK 2. RQST RSVD DEVICE 3. RQST HOT SPARE 4. RQST ACTIVE 5. DO NOT REMOVE 6. RQST IDENT 7. DEVICE OFF

2.8 Riser Card

① Remove the top cover by dislodging the screws.
② Dislodge the screws on the cage to remove the bracket securing the riser card.
③ Pull the riser card bracket outward and upward to remove.
④ Replace your riser card.

Top Cover Screw Placement

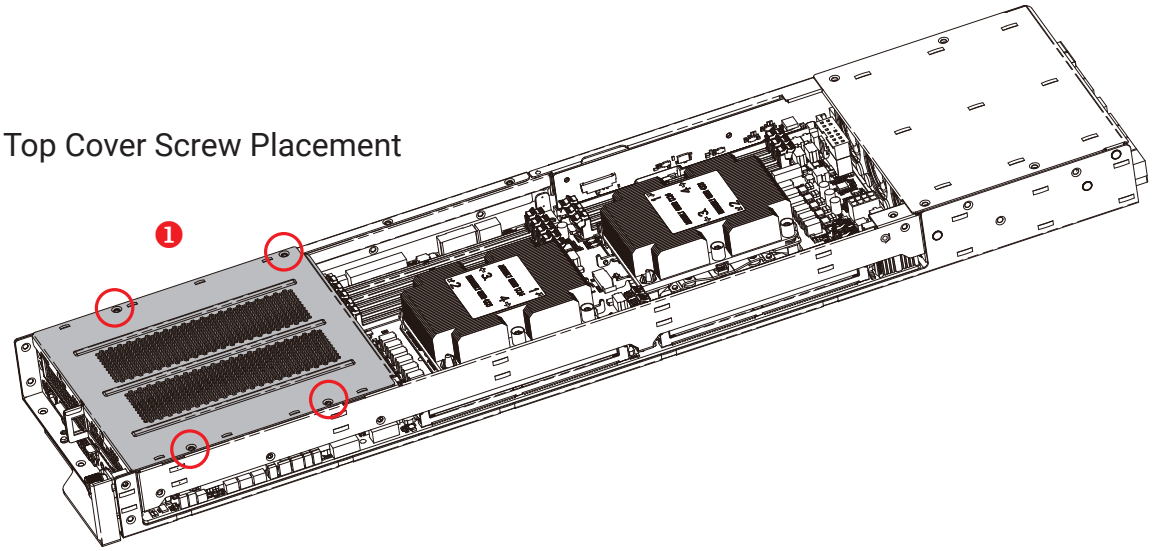

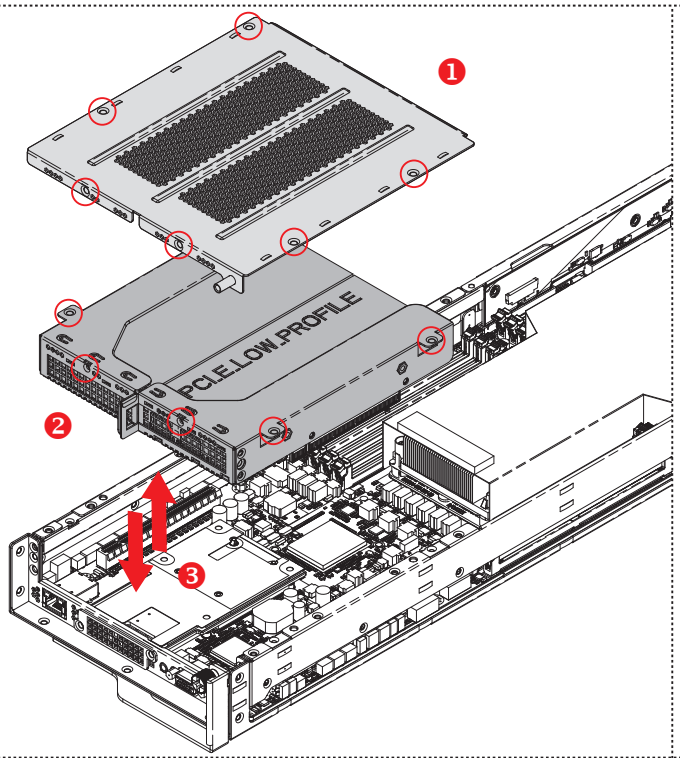

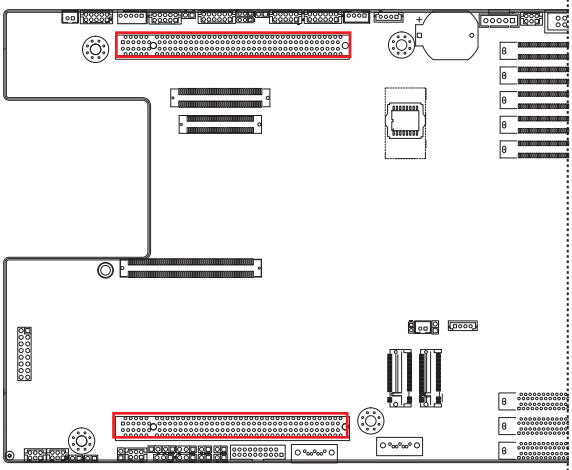

Riser Card Placement
(serverboard top view)

This information is provided for professional technicians only.

2.9 Bridge Board

① Dislodge the screws on the side of the bridge.
② Pull the bridge from the chassis.

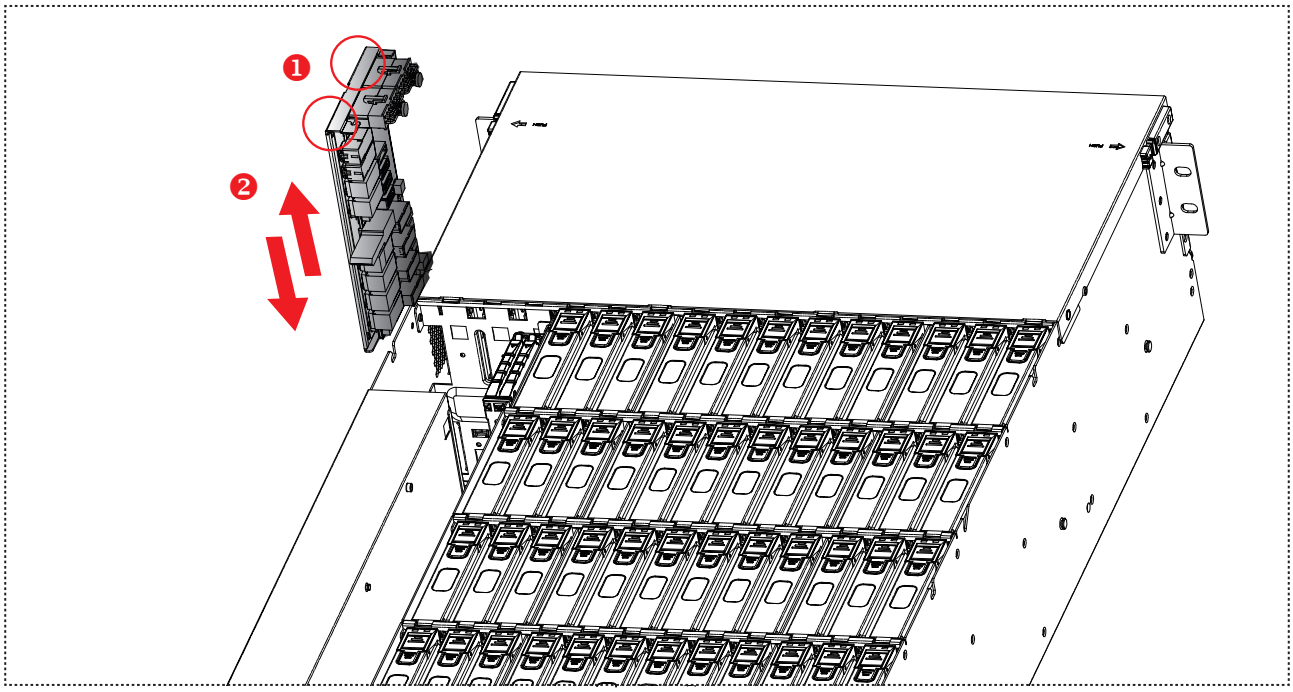

2.10 Rear Handle

① Match the locking plate on the handle with the locks on the chassis.
② Pull the handle upward to lock the handle onto the chassis.
③ Push the handle downward to dissemble the handle.

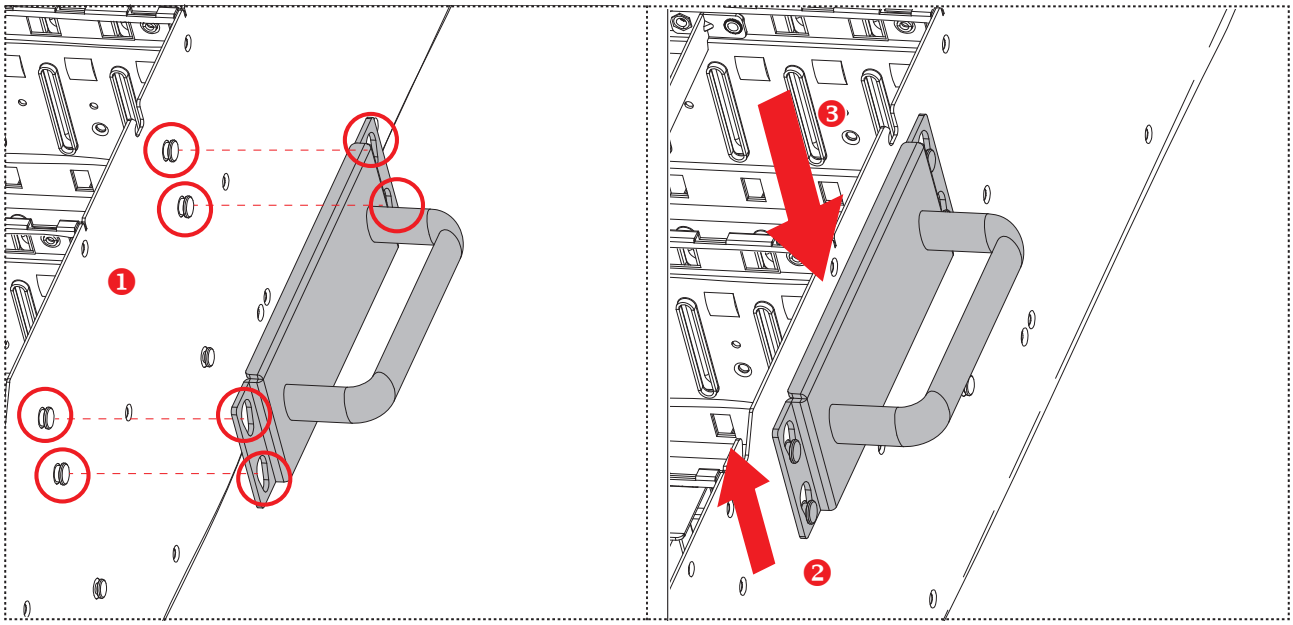

This information is provided for professional technicians only.

2.11 Cable Cover

① Unplug all cables and connectors.
② Unscrew the captive screw from the cable cover.
③ Lift the cover upward.

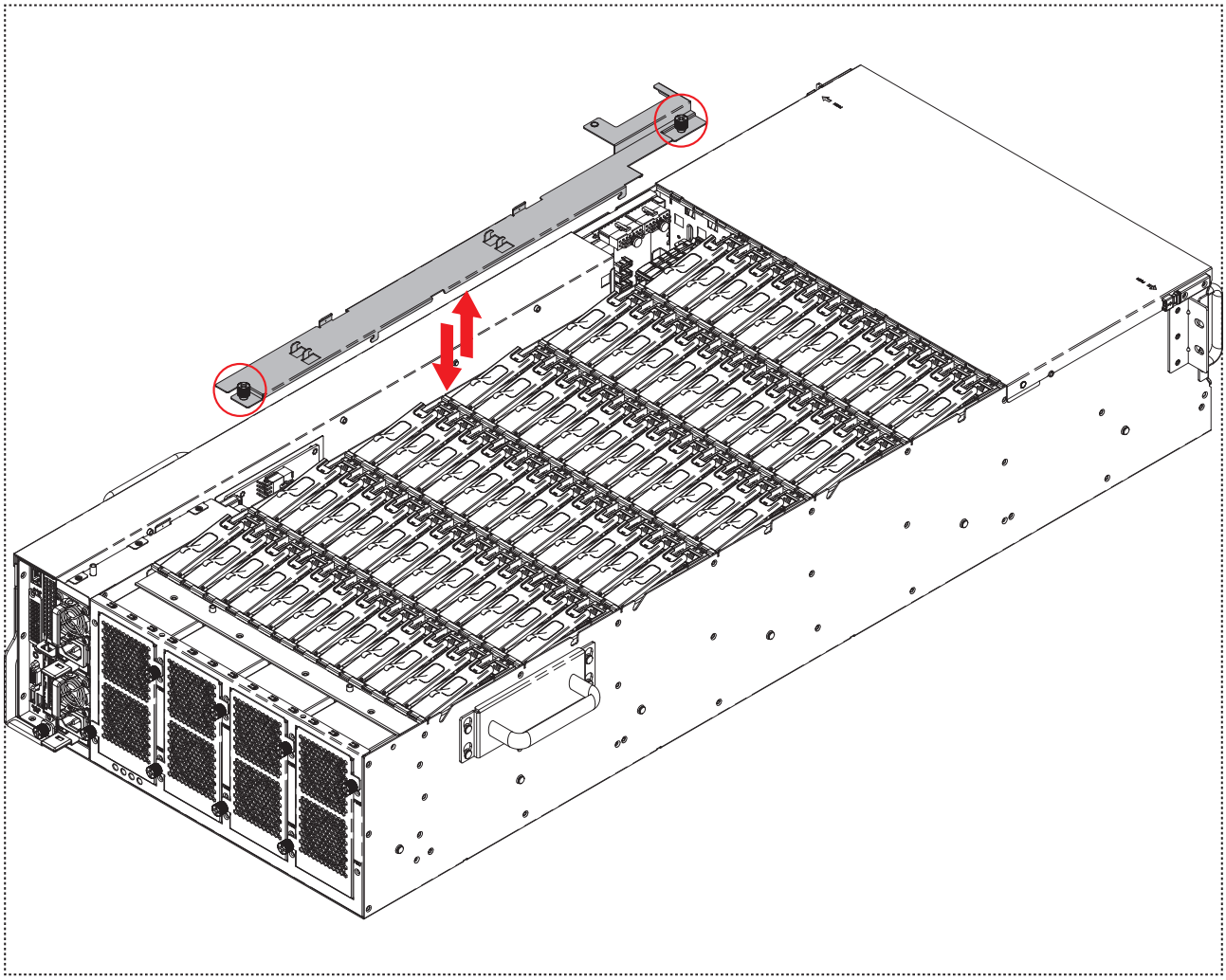

This information is provided for professional technicians only.

2.12 Slide Rail Installation

1. Attach the slide rail braket assembly to the rack frame.
① Align and attach the front rail bracket to the rack.
② Ensure that the latch on the rail is hooked onto the rack.

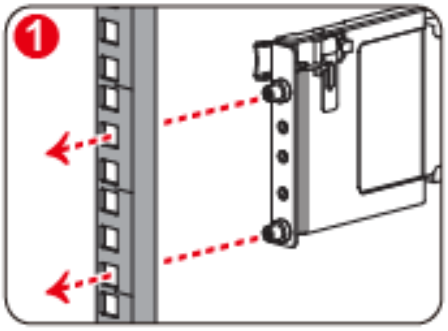

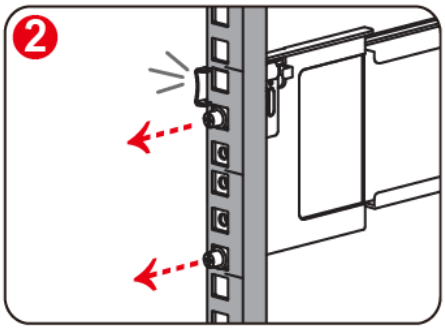

③ Align and attach the rear rail braket to the rack by pushing the latch outward. Ensure the latch is hooked onto the rack.
④ Ensure that the latch on the rail is hooked onto the rack.

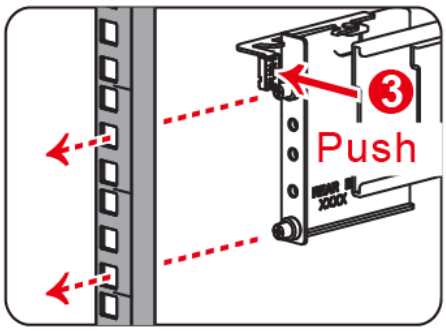

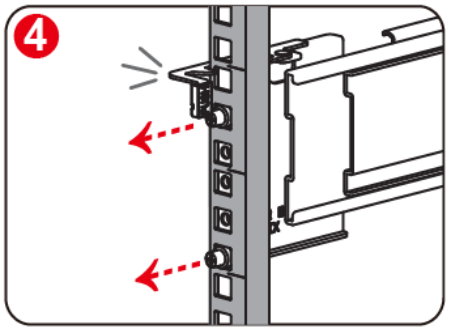

⑤ Secure the rail bracket with a washer and screw on both sides of the rail bracket.

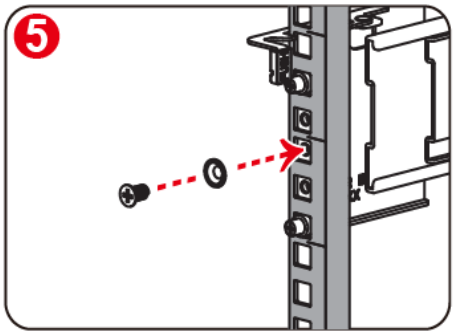

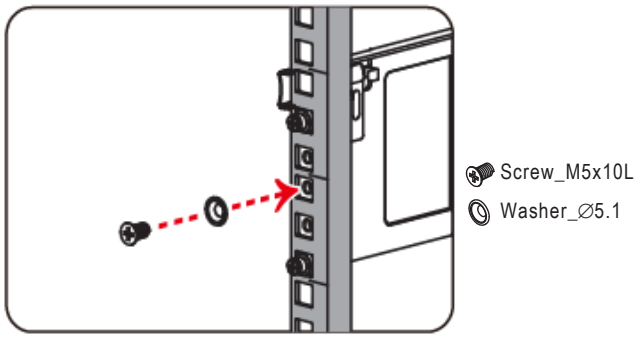

⑥ Repeat ① to ⑤ to install the other side of the rack.

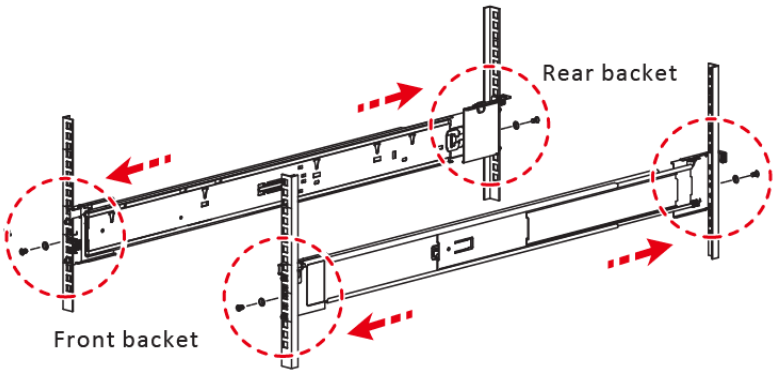

2. Attach the chassis onto the rack frame.

① Pull the inner and middle rail to fully locked position. Press the latch when the rail is 960mm to release the rail to full length (1100mm).

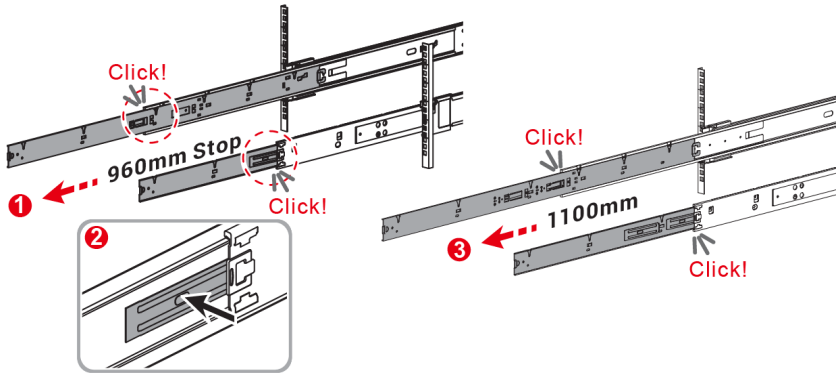

② Position the chassis vertically into the rail. Ensure the standoffs on the chassis slide into the v slots on the rail bracket.

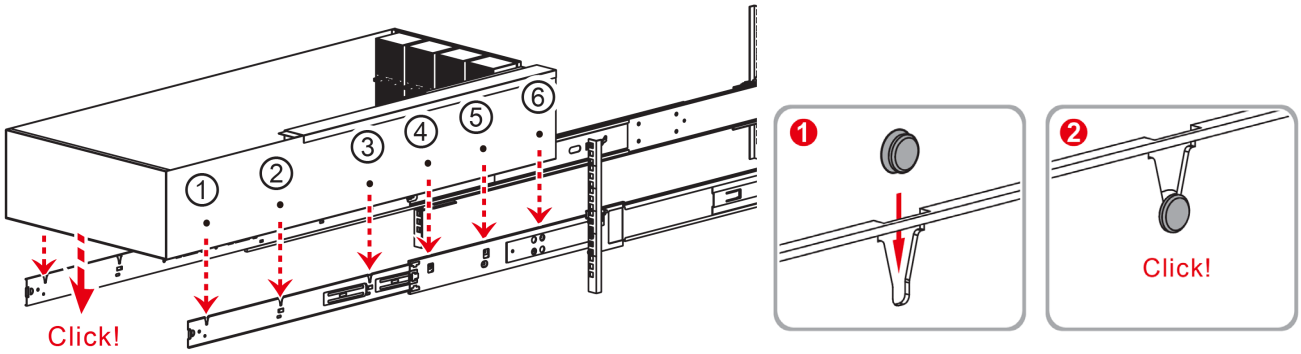

③ Secure the chassis to the rail with screws.

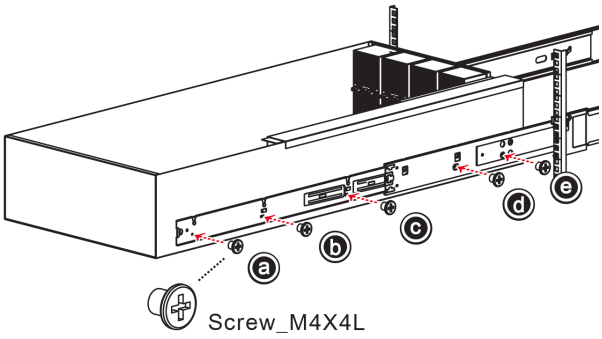

④ Push the release tab on the inner rail and push the chassis into the frame.

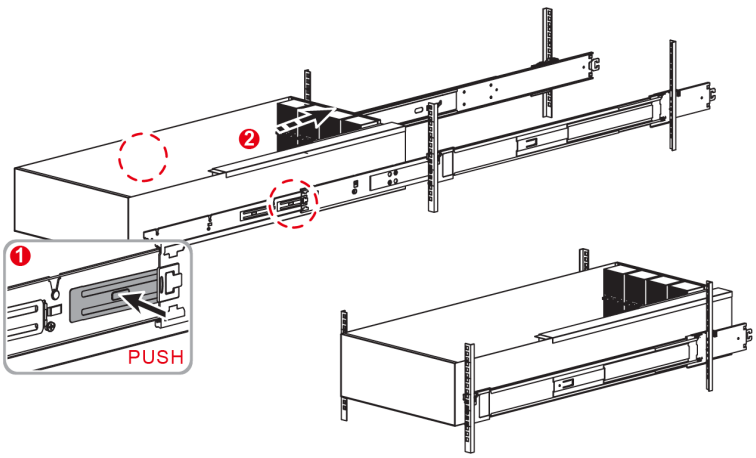

Chapter 3. Hardware Settings

This section provides illustrations that display the internal jumpers, connectors and system LED indicators on the Vela motherboard. The motherboard layout and essential connectors are listed below for your reference.

3.1 Motherboard

3.1.1 Block Diagram

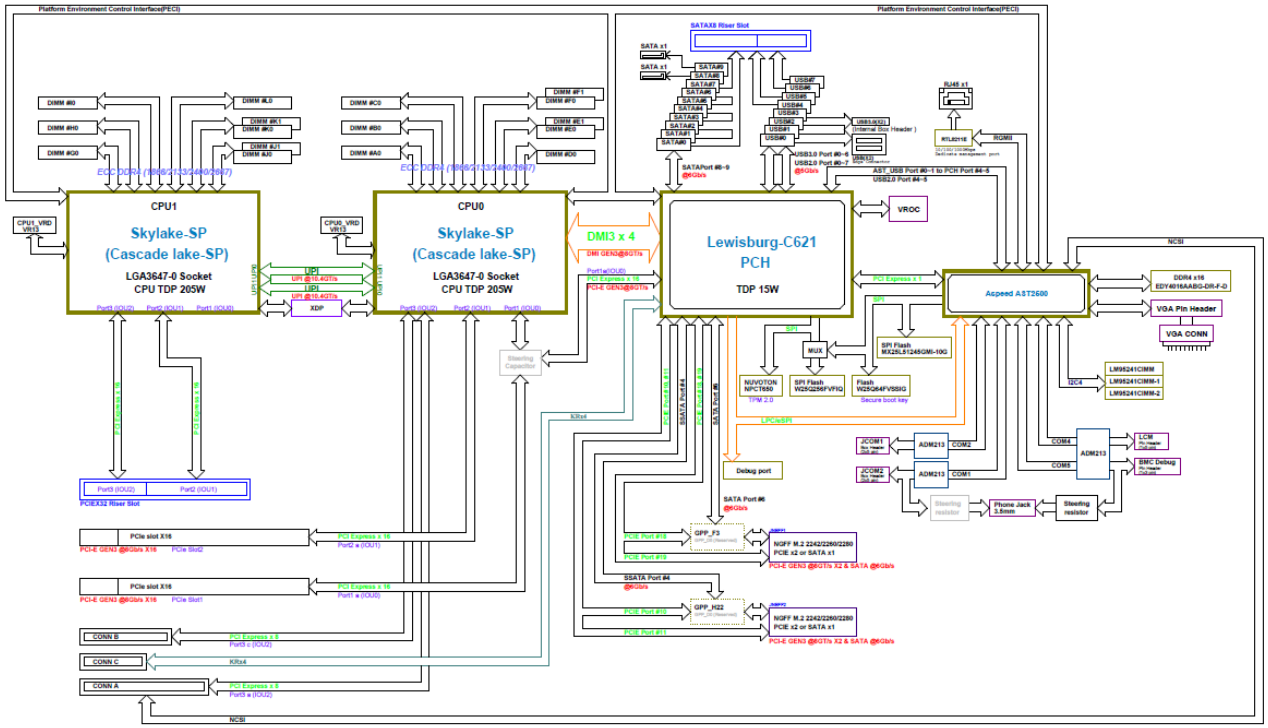

3.1.2 Content List

Connector and Header		Placement	Connector and Header		Placement
1	VGA Connector	JVGA_INT	17	Rack Connector	JRACK
2a 2b 2c	OCP Mezzaine Connector	CN1~3	18	Power Supply Connector (2 x 4 pin)	JPWR1
3a 3b	PCIe Connector	PCIE1 PCIE2	19	LAN Header	JLAN2
4a 4b	COM Port Header	JCOM1 JCOM2	20	Power Supply Connector (2 x 10 pin)	J11
5	LCM Header	JLCM	21	VROC Key	JRAID_KEY
6a 6b	BMC GPIO Header	JBMC_GPIO1 JBMC_GPIO2	22	SATA DOM Power Header	JDOM_PWR
7a 7b	BMC I^2C Header	JBMC_I2C1 JBMC_I2C2	23	Buzzer	JBUZZER
8	Power Supply Connector (1 x 4 pin)	JPWR_OCP	24a 24b	JNGFF Connector	JNGFF1 JNGFF2
9	BIOS SPI ROM Socket	JSPI_BIOS	25a 25b	Serial ATA Header	SATA1 SATA2
10	Battery Socket	JBAT1	26	Front I/O USB Header	JUSB_INT1
11	PMBUS Header	JPMBUS	27	Speaker	JSPKR
12	PCIE Hot-Plug SMB Header	JPCIE_HP	28	PCH_GPIO Header	JPCH_GPIO
13	Front Panel Header	JFRNT_SSI	29	VRM SMB Connector	JSMB_VR
14a 14b	SAMTEC Connector	PCIE3 PCIE4	30	PCH SSGPIO Header	JSSGPIO
15	Power Supply Connector (1 x 5 pin)	J13	31	PCH SGPIO Header	JSGPIO
16	Power Supply Connector (2 x 7 pin)	JPWR2	32	Chassis Intrusion	JINTRUDER
Jumper		**Placement**	**Jumper**		**Placement**
A	NCSI_RXER	J5	G	NTB Jumper	JNTB
B	BMC Debug Port Configuration Jumper	J9	H	Power Good Lock Jumper	JPG_LOCK
C	Top Swap Override Jumper	J8	I	Flash Descriptor Security Override Jumper	J4
D	ME Force Recovery Mode Jumper	J7	J	BMC Reset Jumper	JBMC_RST
E	No Reboot Mode (Watch Dog) Jumper	J6	K	BMC Disable Jumper	JBMC_DIS
F	Clear CMOS Jumper	JCMOS			

3.1.3 Placement

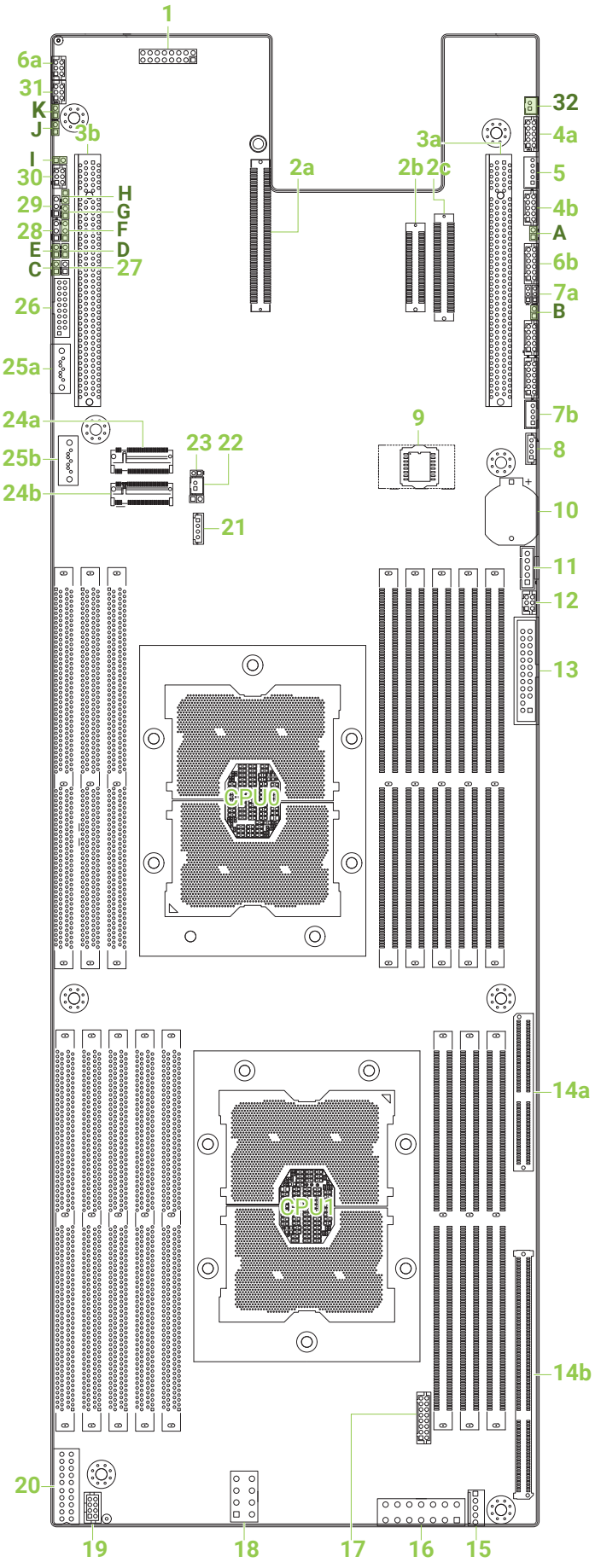

3.1.4 Connector

1 VGA Connector (JVGA_INT)

VGA abbreviates for Video Graphics Array. This is a standard 15-pin D-sub connector used for video output.

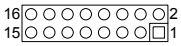

GND	1	2	DACROA
DACGOA	3	4	N.C.
DDC_DATAO	5	6	GND
GND	7	8	DACBOA
N.C.	9	10	AHSYNCO
AVSYNCO	11	12	DVO_5V
GND	13	14	GND
GND	15	16	DDC_CLKO

4a COM Port Header (JCOM1)

COM abbreviates for Communication. This header is a standard 9-pin RS-232 I/O interface that enables connection to peripheral devices.

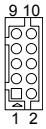

DSRB	1	2	DCDB
RTSB	3	4	RXDB
CTSB	5	6	TXDB
RIB	7	8	DTRB
N.C.	9	10	GND

4b COM Port Header (JCOM2)

COM abbreviates for Communication. This header is a standard 9-pin RS-232 I/O interface that enables connection to peripheral devices.

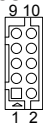

DSRA	1	2	DCDA
RTSA	3	4	RXDA
CTSA	5	6	TXDA
RIA	7	8	DTRA
N.C.	9	10	GND

5 LCM Header (JLCM)

LCM stands forr Liquid Cystral Display Module. This header is a 5-pin used for LCD screen display.

1	SW_PWR_BTN#
2	SW_RST_BTN#
3	TXDC
4	RXDC
5	GND

6a BMC GPIO Header (JBMC_GPIO1)

GPIO abbreviates for General Purpose Input and Output. This 6-pin header defines an input and output signal to the BMC.

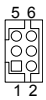

GND	1	2	EXTRST_N#
I2C9SDA	3	4	BMC_GPY1
I2C9SCL	5	6	BMC_GPY0

6b BMC GPIO Header (JBMC_GPIO2)

GPIO abbreviates for General Purpose Input and Output. This 6-pin header defines an input and output signal to the BMC.

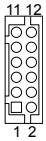

GND	1	2	PWM2
GPIOI3	3	4	PWM1
GPION7	5	6	FAN4_TACH
GPIOP3	7	8	FAN3_TACH
GPIOP2	9	10	FAN2_TACH
+3.3V_DUAL	11	12	FAN1_TACH

7a BMC I²C Header (JBMC_I2C1)

I²C abbreviates for Inter-Integrated Circuit. This 3-pin header is an I²C bus that provides a interconnection between the BMC and chassis devices.

1	I2C10SCL
2	I2C10SDA
3	GND

7b IPMB Header (JBMC_I2C2)

IPMB abbreviates for Intelligent Platform Management Bus. This 4-pin header is an I²C bus that provides a interconnection between the BMC and chassis devices.

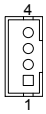

1	I2C1SDA
2	GND
3	I2C1SCL
4	N.C.

8 Power Supply Connector (JPWR_OCP)

This 4-pin connector provides the OCP with power.

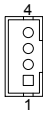

1	+12V_AUX
2	GND
3	GND
4	+12V_AUX

11 PMBus Header (JPMBUS)

PMBus abbreviates for Power Management Bus. This 5-pin header provides is used to control power supplies.

1	SMB_PMBUS_CLK
2	SMB_PMBUS_DATA
3	PMBUS_ALERT_N
4	GND
5	+3.3V

12 PCIE Hot-Plug SMB Header (JPCIE_HP)

SMB abbreviates for System Management Bus. This is 6-pin header that communicates with PCIE hot-plug.

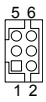

CPU0_HP_I2C_CLK	1	2	CPU1_HP_I2C_CLK
CPU0_HP_I2C_DAT	3	4	CPU1_HP_I2C_DAT
+3.3V	5	6	GND

13 Front Panel Header (JFRNT_SSI)

This 23-pin header is used to control the switch and LED indicators located in the front panel.

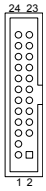

PWR_LED	1	2	+3.3V_DUAL
KEY (no pin)	3	4	+5V_AUX
PWR_LED#	5	6	UIDLED#
+3.3V	7	8	SYS_HEALTH2#
HD_LED#	9	10	SYS_HEALTH#
SW_PWR_BTN#	11	12	+3.3V_DUAL
GND	13	14	PHY_LED0
SW_RST_BTN#	15	16	I2C8SDA
GND	17	18	I2C8SCL
UID_SW_IN_N	19	20	INTRUDER_N
+3.3V_DUAL	21	22	+3.3V_DUAL
FP_NMI_BTN	23	24	PHY_LED1

15 Power Supply Connector (J13)

This 5-pin connector provides the motherboard with power.

1	+5V_AUX
2	+5V_AUX
3	ATX_GD
4	PS_ON#
5	GND

16 Power Supply Connector (JPWR2)

This 14-pin connector provides the motherboard with power.

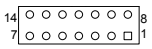

GND	1	8	+12V
GND	2	9	+12V
GND	3	10	+12V
GND	4	11	+12V
GND	5	12	+12V
GND	6	13	+5V_AUX
PS_ON#	7	14	ATX_GD

18 Power Supply Connector (JPWR1)

This 8-pin connector provides the motherboard with power.

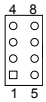

GND	1	5	+12V
GND	2	6	+12V
GND	3	7	+12V
GND	4	8	+12V

20 Power Supply Connector (J11)

This 20-pin connector provides the motherboard with power.

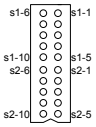

+12V	S1-1	S1-6	+12V
+12V	S1-2	S1-7	+12V
+12V	S1-3	S1-8	+12V
+12V	S1-4	S1-9	+12V
+12V	S1-5	S1-10	+12V
GND	S2-1	S2-6	GND
GND	S2-2	S2-7	GND
GND	S2-3	S2-8	GND
GND	S2-4	S2-9	GND
GND	S2-5	S2-10	GND

21 VROC Key Header (JRAID_KEY)

VROC abbreviates for Intel® Virtual RAID on CPU. This key is used to control and created RAID data on NVMe SSDs.

1	GND
2	+3.3V_DUAL
3	GND
4	PCH_GPP_C10

22 SATA DOM Power Header (JDOM_PWR)

This 2-pin header supplies power to SATA DOM.

1	+5V
2	GND

23 Buzzer (JBUZZER)

This is a 2-pin motherboard speaker.

1	+5V
2	BMC_BUZZER-

26 Front I/O Header (JUSB_INT1)

This is a 11-pin front I/O header.

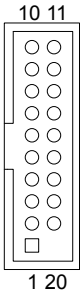

+5V_USB23	1	20	KEY (no pin)
PCH_FP_USB3_RX_N2	2	19	+5V_USB23
PCH_FP_USB3_RX_P2	3	18	PCH_FP_USB3_RX_N3
GND	4	17	PCH_FP_USB3_RX_P3
PCH_FP_USB3_TX_N2	5	16	GND
PCH_FP_USB3_TX_P2	6	15	PCH_FP_USB3_TX_N3
GND	7	14	PCH_FP_USB3_TX_P3
PCH_FP_USB2_N2	8	13	GND
PCH_FP_USB2_P2	9	12	PCH_FP_USB2_N3
N.C.	10	11	PCH_FP_USB2_P3

28 PCH GPIO Header (JPCH_GPIO)

GPIO abbreviates for General Purpose Input and Output. This 6-pin header defines an input and output signal to the Platform Controller Hub.

1	PCH_GPP_C16
2	PCH_GPP_C17
3	GND

29 VRM SMB Connector (JSMB_VR)

VRM abbreviates for Voltage Regulator Module. This is a 3-pin connector that appropriates processors with different supply of voltage.

1	SMB_VR_DAT
2	GND
3	SMB_VR_CLK

30 PCH SSGPIO Header (JSSGPIO)

SGPIO abbreviates for Serial General Purpose Input and Output. This is a 6-pin connector used to control general device data.

GND	1	2	PCH_SSDATAOUT0
PCH_SSDATAOUT1	3	4	PCH_SSLOAD
+3.3V	5	6	PCH_SSCLOCK

31 PCH SGPIO Header (JSGPIO)

SGPIO abbreviates for Serial General Purpose Input and Output. This is a 6-pin connector used to control general device data.

GND	1	2	PCH_SDATAOUT0
PCH_SDATAOUT1	3	4	PCH_SLOAD
+3.3V	5	6	PCH_SCLOCK

32 Chassis Intrusion (JINTRUDER)

JINTRUDER	Setting	
Short	Case open	
Open	Enable	Default

3.1.5 Jumper

A NCSI_RXER (J5)

J5	Setting	
Short	Enable	
Open	Disable	Default

B BMC Debug port Configurations (J9)

J9	Setting	
Short	Disable	
Open	BMC Debug port	Default

C Top Swap Override Jumper (J8)

J8	Setting	
Short	Enable Top swap mode	
Open	Disable Top swap mode	Default

D ME Force Recovery Mode Jumper (J7)

J7	Setting	
Short	ME Forcce Recovery Mode	
Open	Normal	Default

E No Reboot Mode (Watch Dog) Jumper (J6)

J6	Setting	
Short	Disable	
Open	Enable	Default

F Clear CMOS Jumper (JCMOS)

JCMOS	Setting	
Pin 1-2	Normal	Default
Pin 2-3	Clear CMOS	

G NTB Jumper (JNTB)

JNTB	Setting	
Short	Downstream port	
Open	Upstream port	Default

H Power Good Lock Jumper (JPG_LOCK)

JPG_LOCK	Setting	
Short	Enable	
Open	Disable	Default

I Flash Descriptor Security verride Jumper (J4)

J4	Setting	
Short	Flash security override	
Open	Disable	Default

J BMC Reset Jumper (JBMC_RST)

JBMC_RST	Setting	
Short	Reset BMC	
Open	Normal	Default

K BMC Disable Jumper (JBMC_DIS)

JBMC_DIS	Setting	
Short	Disable	
Open	Normal	Default

3.1.6 Internal LED

BMC Heart Beat		Green (Blinking)	BMC activity is detected.
		Off	BMC is not active.
SYS PG LED		Green	System power good is ready.
		Off	System power good is not ready.
RSMRST PG LED		Yellow	Resume Well Reset is ready.
		Off	Resume Well Reset is not ready.
UID LED		Blue	UID activity is detected.
		Off	No UID activity is detected.
NGFF LED		Blue (Blinking)	NGFF activity is detected.
		Off	No NGFF activity is detected.
LAN LED	LED6	Green	Link.
	LED5	Yellow (Blinking)	1G.
	LED4	Green Blinking	Normal. 100M.

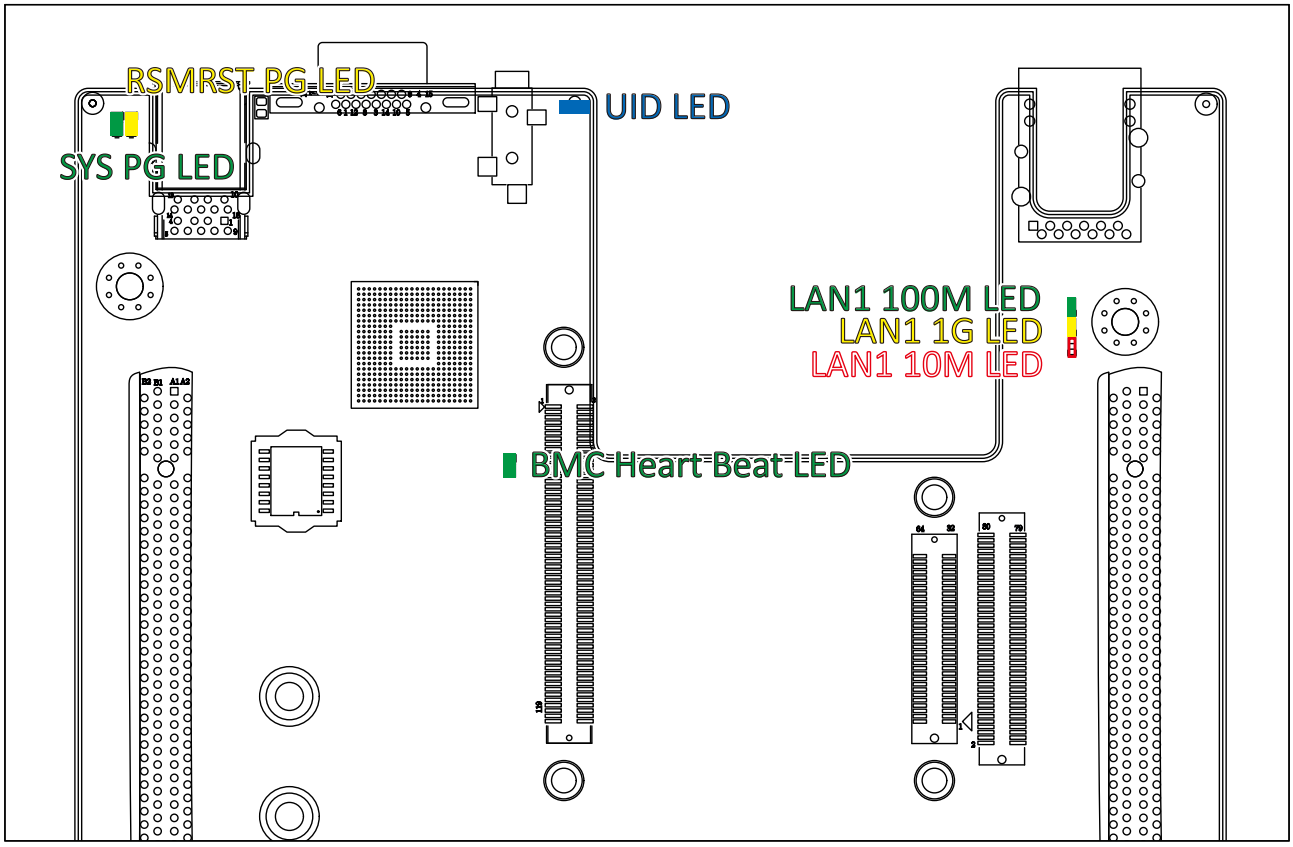

3.2 Drive Backplane: 24 Bay

3.2.2 Connector Placement

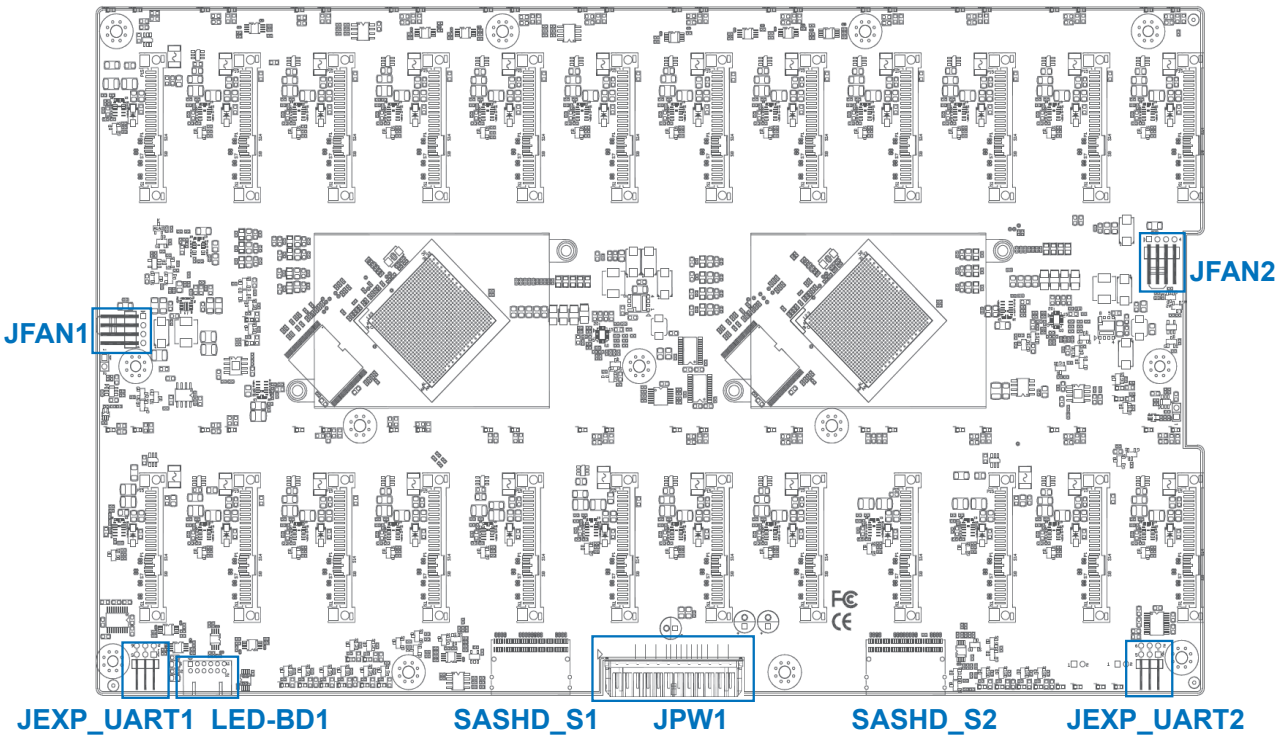

Fan connect for debug use
JFAN1 & JFAN2

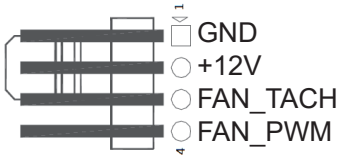

Control for Expander
JEXP_UART1 & JEXP_UART2

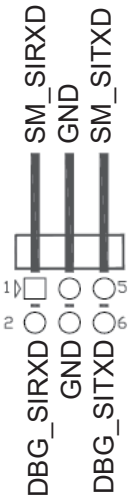

Front LED Board Control for
Display HDD LED Status
LED-BD1

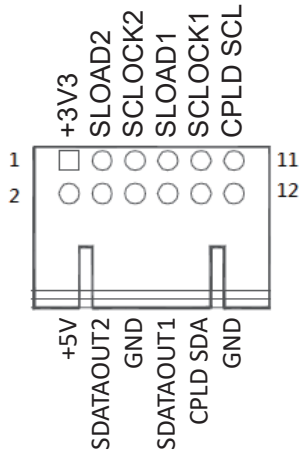

Power Connector
JPW1

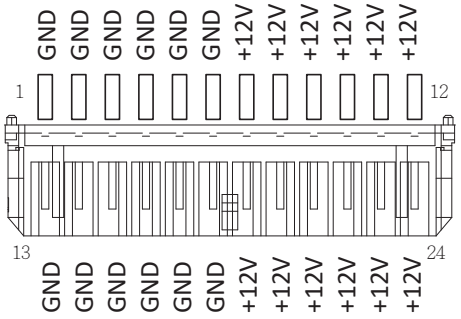

3.2.2 Internal LED

SAS PHY Link Status (LEDA1 to LEDA16)	Blue (On)	Link up.
	Blue (Blinking)	Activity is detected.
	Off	Link down.
Expander Blink (LED25,LED28)	Blue (Blinking)	Expander is alive, 0.0833Hz (12 seconds per cycle).
Expander Heart Bit (LED26,LED27)	Blue (Blinking)	Expander FW is running.

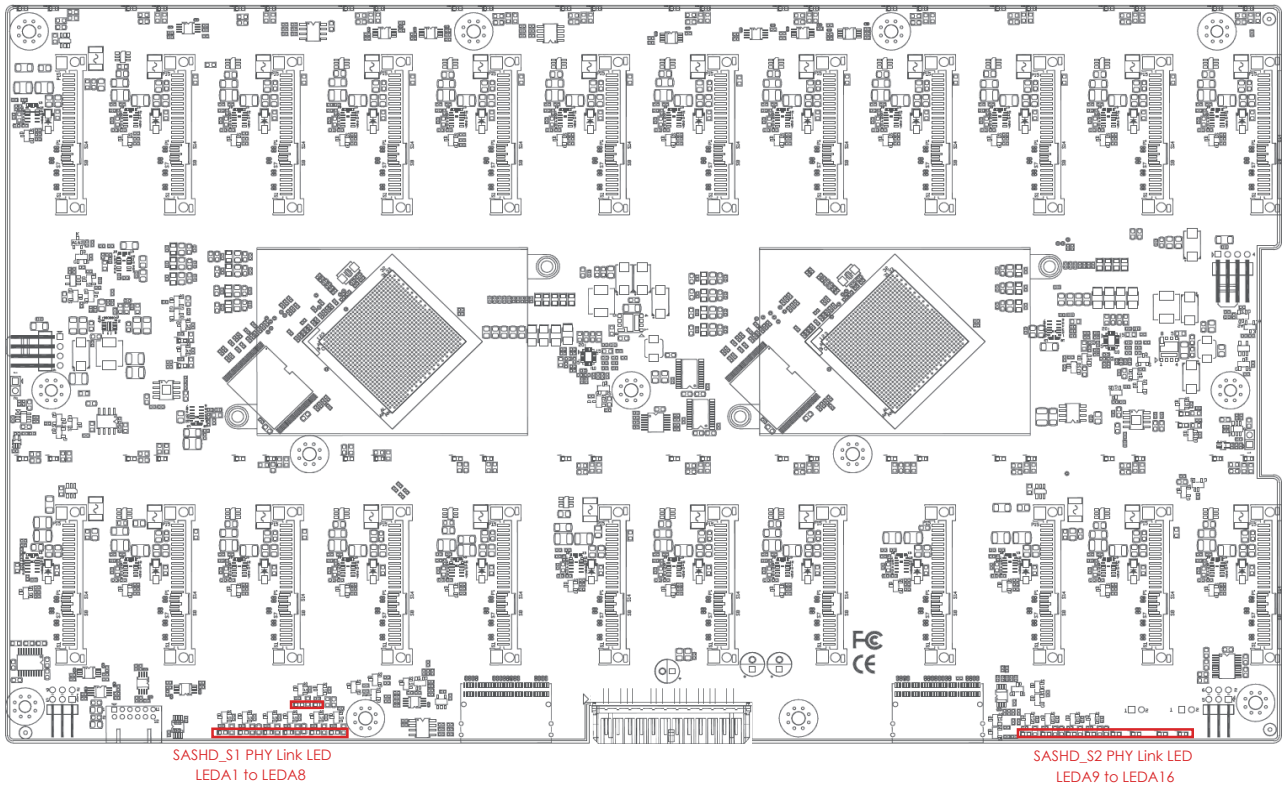

3.3 Drive Backplane: 30 Bay

3.3.1 Connector Placement

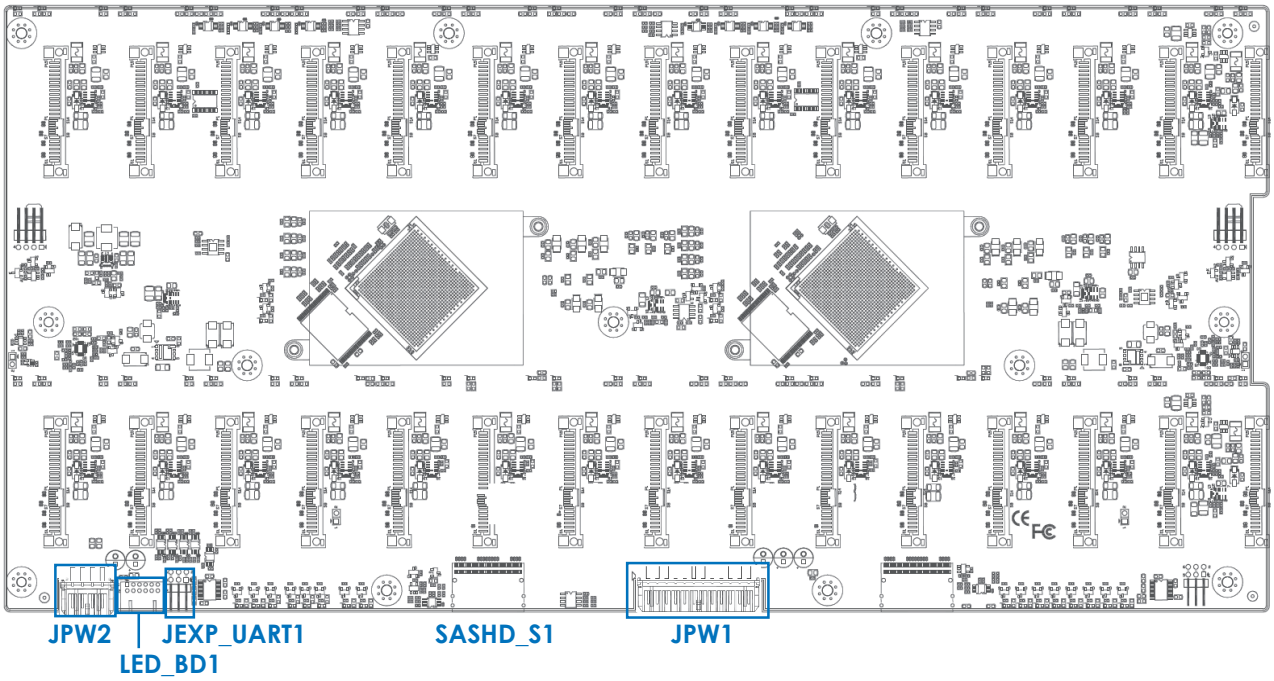

Power Connector
JPW2

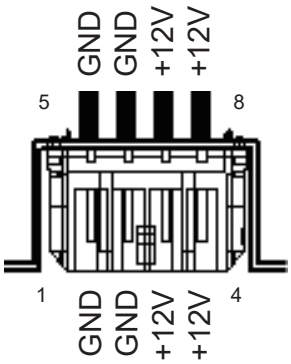

Front LED Board Control for
Display HDD LED Status
LED-BD1

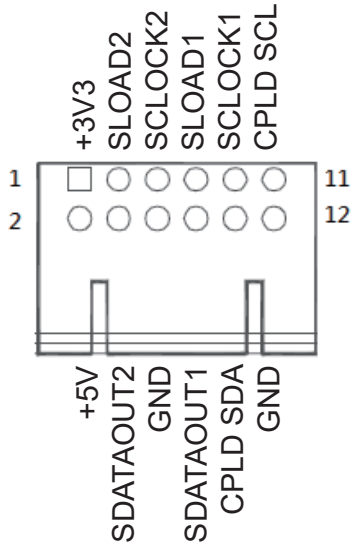

Control for Expander
JEXP_UART1

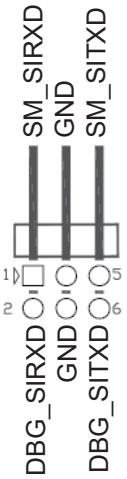

Power Connector
JPW1

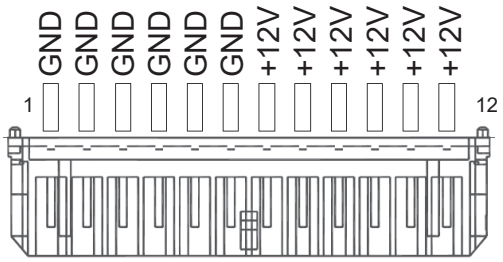

3.3.2 Internal LED

SAS PHY Link Status (LEDA1 to LEDA8)	Blue (On)	Link up.
	Blue (Blinking)	Activity is detected.
	Off	Link down.
Expander Blink (LED31)	Blue (Blinking)	Expander is alive, 0.0833Hz (12 seconds per cycle)
Expander Heart Bit (LED33)	Blue (Blinking)	Expander FW is running

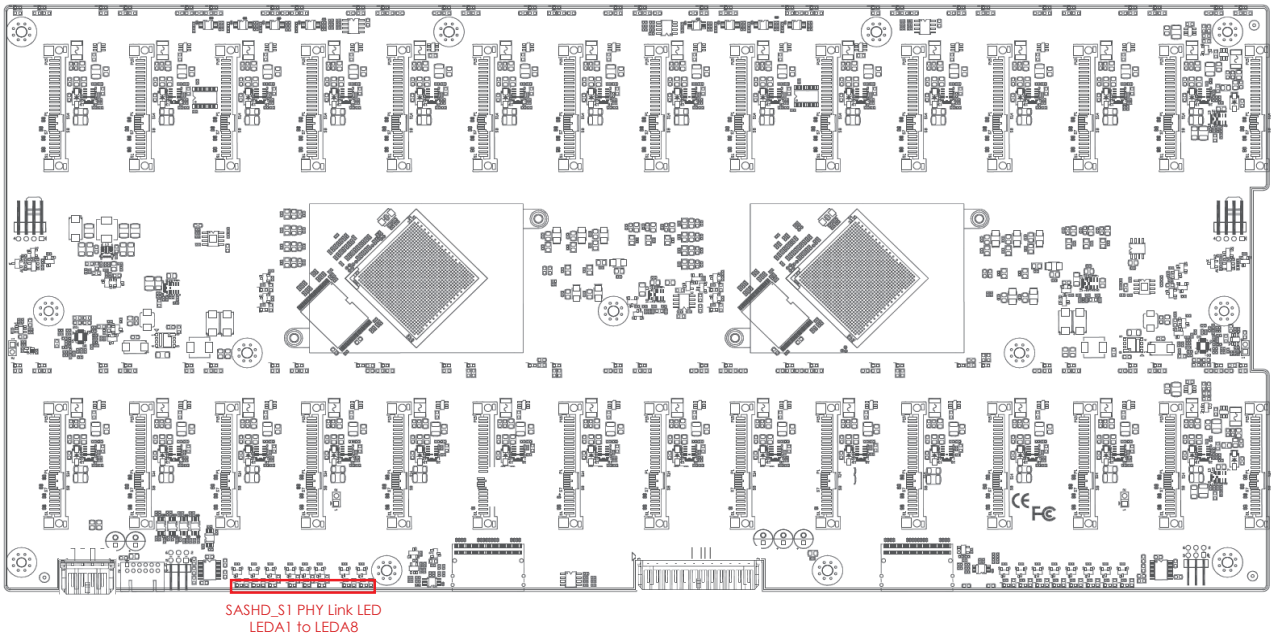

Chapter 4. BIOS Configuration Settings

This chapter demonstrates how to configure the UEFI BIOS settings in your system device. You can enter the BIOS screen during system startup.

To enter BIOS configuration settings,
- Press **Esc** key during the Power-On-Self-Test (POST)

To enter BIOS after POST, you have to restart the system by using one of the three methods:
- Press **Ctrl** + **Alt** + **Delete.**
- Press the reset button on the system chassis.
- Turn the system off and on.

NOTE

The following pages provide the details of BIOS menu. Please be noticed that the BIOS menu are continually changing due to the BIOS updating. The BIOS menu provided are the most updated ones when this manual is written.

4.1 Navigation Keys

The navigation keys are listed below.

Function Key	Description
< ↑ > < ← > < → > < ↓ >	Select item.
< Enter >	Select and enter sub-screen.
< + > < - >	Modify selected option.
< F1 >	General help.
< F2 >	Previous Value.
< F3 >	Optimized defaults.
< F4 >	Save & Exit.
< F5> < F6 >	Change values.
< F7 >	Discard Change and Exit.
< F9 >	Load Optimal Default for all values.
< F10 >	Save changes and exit.
< F12 >	Print Screen.
< Esc >	Exit the current menu screen.

4.2 BIOS Setup

4.2.1 Menu

Press ⬅ and ➡ to select the options of the menu bar.

Press **Enter** to access the option screen.

Menu	Description
Main	Displays basic system information and date & time.
Advanced	Allows configuration of advanced system settings.
Security	Sets passwords and security functions.
Power	Sets the power management parameters.
Boot	Sets boot options, such as Quick Boot or USB Boot.

4.3 Main

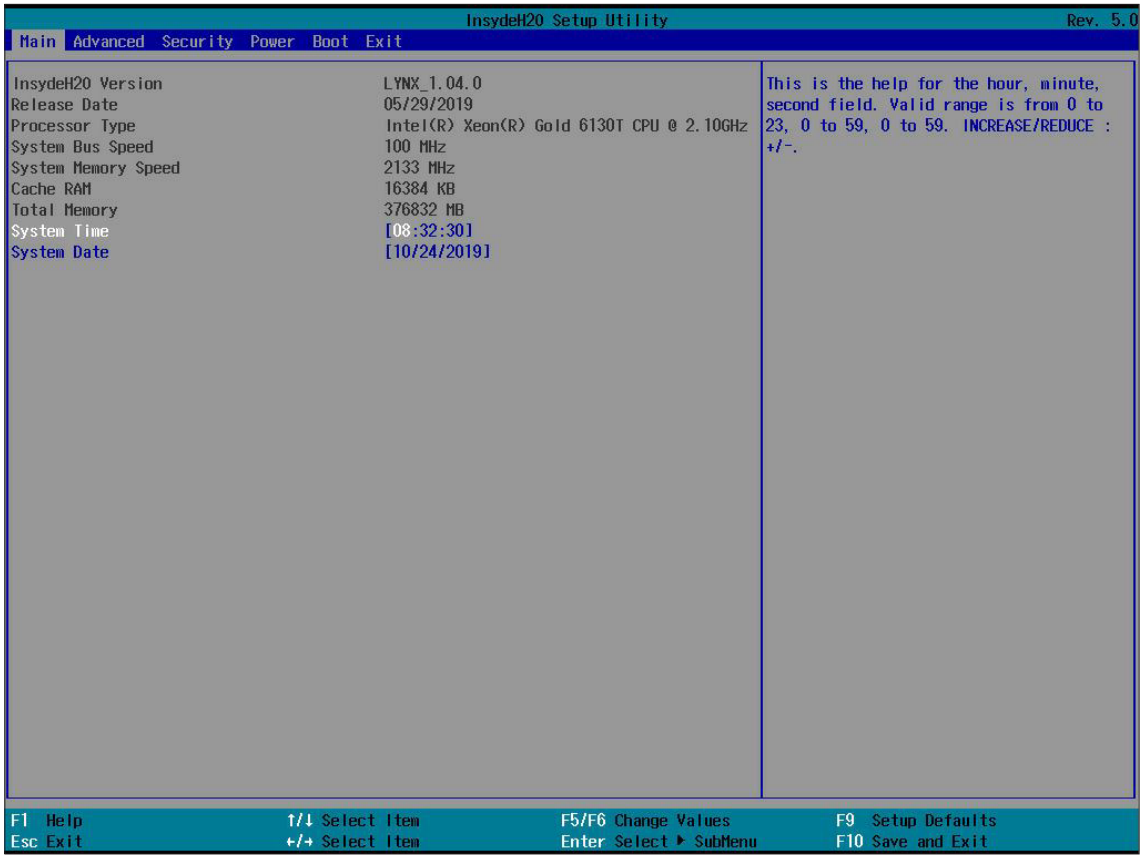

Main Option Key:

4.3.1 Main

Main	
System time	Configures the current time.
System date	Configures the current date.

4.4 Advanced

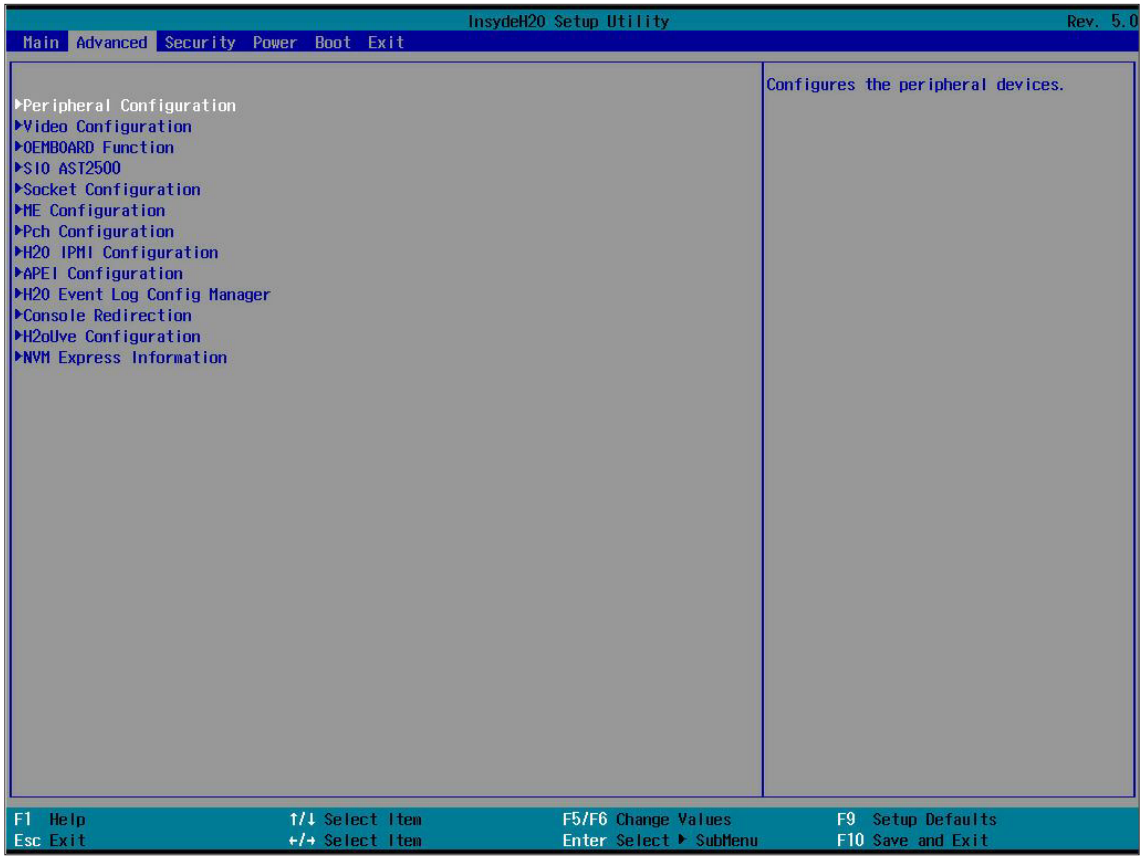

Advanced Option Key:

4.4.1 Peripheral Configuration

Peripheral Configuration		
PCIe SR-IOV	Enable	Disable
PCIe ARI	Enable	Disable
ARI Forward	Enable	Disable
Spread Spectrum	Enable	Disable

4.4.2 Video Configuration

Video Configuration		
Display Mode	Plug In First	On Board First

4.4.3 OEMBoard Function

OEMBOARD Function				
Messiah Function	SMBIOS Updated	SMBIOS Updated	Auto	By Utility
	SMBIOS TO BMC Redfish	Write SMBIOS to BMC	Enable	Disable
	Halt On Error Function	Halt On Error	Enable	Disable
	Manufacturing Function	Manufacturing Test Mode	Enable	Disable
		Dumped Storage	USB Storage	SATA Storage
		USB Test Function	Enable	Disable
		SATA Test Function	Enable	Disable

4.4.4 SIO AST2500

SIO AST2500				
Serial Port A	Auto	Enable	Disable	
Base I/O Address	2E8	2F8	3E8	3F8
Interrupt	IRQ3		IRQ4	
Serial Port B	Auto	Enable	Disable	
Base I/O Address	2E8	2F8	3E8	3F8
Interrupt	IRQ3		IRQ4	
Serial Port D	Auto	Enable	Disable	
Base I/O Address	2E8	2F8	3E8	3F8
Interrupt	IRQ7		IRQ10	

4.4.5 Socket Configuration

Socket Configuration						
Processor Configuration	Per-Socket Information	Hyper-Threading[ALL]	Enable	Disable		
		VMX	Enable	Disable		
		Enable SMX	Enable	Disable		
		Extended APIC	Enable	Disable		
Common RefCode Configuration	MMCFG Size	64M	128M	256M		
		512M	1G	2G		
	MMIO High Base	56T	40T	24T		
		16T	4T	1T		
	MMIO High Granularity Size	1G	4G	16G		
		64G	256G	1024G		
	Serial Debug Message Level	Disable	Minimum			
		Normal	Maximum			
UPI Configuration	UPI General Configuration	UPI Status	Link Speed Mode	Slow	Fast	
			Link Frequency Select	Auto	9.6Gb/s	
				10.4Gb/s	Use Per Link Setting	
			Link L0p Enable	Auto	Enable	Disable
			Link L1 Enable	Auto	Enable	Disable
			Legacy VGA Socket	Min=0, Max=3		
			Legacy VGA Stack	Min=0, Max=6		
Memory Configuration	Integrated Memory Controller (iMC)	Enforce POR	Auto	POR	Disable	
		Memory Frequency	Auto	Selections in MHz		
		IMC BCLK	Auto	100 MHz	133 MHz	
		MRC Promote Warnings	Enable	Disable		
		Promote Warnings	Enable	Disable		
		Halt on mem Training Error	Enable	Disable		
		Attempt Fast Boot	Auto	Enable	Disable	
		Attempt Fast Cold Boot	Auto	Enable	Disable	
		MemTest On Fast Boot	Auto	Enable	Disable	
		Enable ADR	Enable	Disable		
		2x Refresh Enable	Auto	Enable	Disable	

Memory Configuration	Memory Map	Volatile Memory Mode	Auto	1LM	2LM		
		AppDirect cache	Auto	Enable	Disable		
		eADR Support	Auto	Enable	Disable		
		1LM Memory Interleave Granularity	Auto	256B Target, 256B Channel	64B Target, 64B Channel		
		IMC Interleaving	Auto	1-way Interleave	2-way Interleave		
		Channel Interleaving	Auto	1-way Interleave			
			2-way Interleave	3-way Interleave			
		Rank Interleaving	Auto	1-way Interleave	2-way Interleave		
			4-way Interleave	8-way Interleave			
		Socket Interleave Below 4GB	Enable	Disable			
	Memory RAS Configuration	Static Virtual Lockstep Mode	Enable	Disable			
		Mirror mode	Enable Mirror Mode (1LM)	Disable			
		Mirror TAD0	Enabled	Disable			
		Enable Partial Mirror	Partial Mirror Mode (1LM)	Disable			
		UEFI ARM Mirror	Enable	Disable			
		Memory Rank Sparing	Enable	Disable			
		Correctable Error Threshold	Min= 0x0, Max= 0x7fff				
		SDDC Plus One	Enable	Disable			
		ADDDC Sparing	Enable	Disable			
		Set NGN Die Sparing	Enable	Disable			
		Patrol Scrub	Enable	Disable			
		Patrol Scrub Interval	Min=0, Max=24				
		Patrol Scrub Address Mode	Reverse Address	System Physical Address			
	NGN Configuration	NGNVM DIMM Secure Erase Unit	NGN Factory Reset/Clear	Enable	Disable		
			Average Power Budget	Min=10000, Max=18000			
			Publish ARS capability	Auto	Enable	Disable	
			NGN CMD Time	Auto	1N	2N	
			NGN ECC Read Check	Auto	Enable	Disable	
			Thermal Throttling Thresholds Offset	Auto	Enable		
			CR Fast Go Configuration	Auto	Default	Option 1 ~ 5	
			CR Latch System Shutdown State	Enable	Disable		
			Snoopy mode for 2LM	Enable	Disable		
			Extended Type 17 Structure	Enable	Disable		
			Enable power cycle policy	Enable	Disable		
			Snoopy mode for AD	Enable	Disable		

Memory Configuration	NGN Configuration	NGNVM DIMM Secure Erase Unit	App Direct Memory Hole	Enable	Disable	
			LSx implementation	SWSMI	ASL	
			SMBus Max Access Time	Min= 0, Max= 4294967295		
			SMBus Release Delay	Min= 0, Max= 4294967295		
			Erase All DIMMs	Enable	Disable	
			S0 CH0~5 S1 CH0~5 S2 CH0~5 S3 CH0~5	Enable	Disable	
	Memory Dfx Configuration	Load NGN DIMM Management Drivers	Auto	Enable	Disable	
		Memory Interleaving	Auto	NUMA	2-way Node Interleave	4-way Node Interleave
		Lock NGN CSRs	Auto	Enable	Disable	
		NGN ECC Correctable error	Auto	Enable	Disable	
		NGN ECC Write Check	Auto	Enable	Disable	
		NGN ECC Write Retry Flow Exit	Auto	Enable	Disable	
		C/A Parity Enable	Auto	Enable	Disable	
		High Address Region	Auto	Bit Postion 33~45		
		Low Mem Channel Config	Auto	Channel 0	Channel 1	Channel 2
		CLX A0 Starve Threshold	Enable	Disable		
		Configuration Mask for 2LM	Normal	Aggressive		
		CR Halt/Warn Mixed SKU	Auto	Enable	Disable	
		Crystal Ridge ACPI Debug Interface	ACPI Debug Object	COM1		
		NFIT debug logs	Enable	Disable		
		NFIT NVDIMM SKU Based	Enable	Disable		
		Publish NVDIMM DIMM Ctrl Region SPA	Enable	Disable		
		Skip ARS on Boot	Enable	[Disable		
		ECC Checking	Auto	Enable	Disable	
		2GB Short Stroke Configuration	Interleaved	Non-Interleaved	Disable	
		Force 1-Ch Way in FM 2-2-2 Configuration	Enable	Disable		

IIO Configuration	PCI 64-Bit Resource Allocation	Enable			Disable		
	PCIe Train by BIOS	Yes			No		
	PCIe Hot Plug	Auto	Manual		Enable	Disable	
	PCIe ACPI Hot Plug	Enable	Disable		Per-Port		
	PCI-E Completion Timeout (Global) Disable	Yes	No		Per-Port		
	PCI-E Global Timeout Value	50us to 10ms	16ms to 55ms		65ms to 210ms	260ms to 900ms	
		1s to 3.5s	4s to 13s		17s to 64s		
	PCI-E ASPM Support (Global)	L1 Only	Disable		Per-Port		
	IOAT Configuration	Sck0 IOAT Config	Disable TPH		Yes	No	
			Prioritize TPH		Enable	Disable	
			Relaxed Ordering		Enable	Disable	
			IOAT Function 0/1/2/3/4/5/6/7 Items		DMA	Enable	
						Disable	
					No Snoop	Enable	
						Disable	
	Intel® VT for Directed I/O (VT-d)	Intel® VT for Directed I/O (VT-d)	Enable		Disable		
		Interrupt Remapping	Enable		Disable		
		PassThrough DMA	Enable		Disable		
		ATS	Enable		Disable		
		Posted Interrupt	Enable		Disable		
		Coherency Support (Non-Isoch)	Enable		Disable		
		Access Control Services	Enable		Disable		
	Intel® VMD technology	Intel® VMD for Volume Management Device on Socket 0/1/2/3	Intel® VMD for Volume Management Device for PStack0~ PStack2		Enable	Disable	
			VMD port 1A~1D/ 2A~2D/ 3A~3D		Enable	Disable	
			Hot Plug Capable		Enable	Disable	
			CfgBar size		Min=20, Max=28		
			CfgBar attribute		32-bit non-prefetchable		
					64-bit non-prefetchable		
					64-bit prefetchable		
			MemBar1 size		Min=12, Max=47		
			MemBar1 attribute		32-bit non-prefetchable		
					64-bit non-prefetchable		
					64-bit prefetchable		
			MemBar2 size		Min=12, Max=47		

IIO Configuration	Intel® VMD technology	Intel® VMD for Volume Management Device on Socket 0	MemBar2 attribute	32-bit non-prefetchable		
				64-bit non-prefetchable		
				64-bit prefetchable		
Advanced Power Configuration	CPU P State Control	WFR Uncore GV Rate Reduction	Auto	Enable	Disable	
		Uncore Freq Scaling (UFS)	Enable	Disable		
		AVX ICCP pre-grant level	128 Heavy	256 Light	256 Heavy	
			512 Light	512 Heavy		
		SpeedStep (Pstates)	Enable	Disable		
		Config TDP	Normal	Level 1	Level 2	
		P State Domain	All	One		
		EIST PSD Function	HW_ALL	SW_ALL	SW_ANY	
		SINGLE_PCTL	Enable	Disable		
		Single Power Domain (SPD)	Enable	Disable		
		Boot performance mode	Max Performance	Max Efficient	Set by Intel Node Manager	
		Energy Efficient Turbo	Enable	Disable		
		Turbo Mode	Enable	Disable		
		CPU Flex Ratio Override	Enable	Disable		
		Perf P-Limit Differential	Min=0, Max=7			
		Perf P-Limit Clip	Min=0, Max=31			
		Perf P-Limit Threshold	Min=0, Max=31			
		Perf P Limit	Enable	Disable		
	Hardware PM State Control	Hardware P-States	Disable	Native Mode		
			Out of Band Mode	Native Mode with No Legacy Support		
		HardwarePM Interrupt	Enable	Disable		
		EPP Enable	Enable	Disable		
		APS rocketing	Enable	Disable		
		Scalability	Enable	Disable		
		RAPL Prioritization	Enable	Disable		
	Package C State Control	Package C State	C0/C1 state	C2 state		
			C6(non Retention)	C6(Retention) state		
			No Limit	Auto		
		C2C3TT	Min=0, Max=255			
		PKG C-state Lat. Neg.	Enable	Disable		
		LTR IIO Input	Take IIO LTR input	Ignore IIO LTR input		
		MDLL Off	Auto	Enable	Disable	
		Latency Tolerence Requirement	Snoop Latency Override	Enable	Disable	
			Force Snoop Latency Override	Enable	[Disable]	
			Snoop Latency Multiplier	Min=0, Max=7, [0]		

Advanced Power Configuration	Package C State Control	Latency Tolerence Requirement	Force Non-Snoop Latency Override	Min=0x0, Max=0x3ff	
			Non-Snoop Latency Override	Enable	Disable
			Non-Snoop Latency Multiplier	Min=0, Max=7	
			Non-Snoop Latency Value	Min=0x0, Max=0x3ff	
		Pkg C-state SA Power Management Control	CPU0 SAPMCTL_CFG/ CPU1 SAPMCTL_CFG/ CPU2 SAPMCTL_CFG/ CPU3 SAPMCTL_CFG	IIO0_PKGC_ CLK_GATE_ DISABLE	Enable
					Disable
				IIO1_PKGC_ CLK_GATE_ DISABLE	Enable
					Disable
				IIO2_PKGC_ CLK_GATE_ DISABLE	Enable
					Disable
				UPI01_PKGC_ CLK_GATE_ DISABLE	Enable
					Disable
				UPI23_PKGC_ CLK_GATE_ DISABLE	Enable
					Disable
				MC1 PKGC CLK GATE DISABLE	Enable
					Disable
				MC0 PKGC CLK GATE DISABLE	Enable
					Disable
				UPI01 PLL Shutdown En	Enable
					Disable
				UPI23 PLL Shutdown En	Enable
					Disable
				PCIe IIO0 PLL Shutdown En	Enable
					Disable
				PCIe IIO1 PLL Shutdown En	Enable
					Disable
				PCIe IIO2 PLL Shutdown En	Enable
					Disable
				MC0 PLLs Shutdown En	Enable
					Disable
				MC1 PLLs Shutdown En	Enable
					Disable
				SetVID Decay Disable	Enable
					Disable
				SAPMCTL_CFG LOCK	Enable
					Disable

4.4.6 ME Configuration

ME Configuration				
Server ME Configuration	General ME Configuration	Altitude	Min=0x0, Max=0xffff	
		MCTP Bus Owner	Min=0x0, Max=0xffff	
Server ME Debug Configuration	Server ME General Configuration	ME Initialization Complete Timeout	Min=0, Max=12	
		Enable HSIO Messaging	Enable	Disable
		DRAM Init Done Enable	0	1 / None
		DRAM Initialization Status	Auto - true status	0 - Success
			1 - No Memory in Channels	2 - Memory Init Error
		Host Reset Warning	0	1 / None
		Enable Pre-DramInit Done ME Reset	0	1 / None
		HMRFPO_LOCK Message	Enable	Disable
		HMRFPO_ENABLE Message	Enable	Disable
		END_OF_POST Message	Enable	Disable
		HECI-1 Enable HECI-2 Enable HECI-3 Enable	Enable	Disable
		Core Bios Done Message	Enable	Disable
	Override ICC Clock Settings	Override ICC Clock Settings	Override ICC Clock Settings	0 / 1 / None
			ICC Clock Spread Spectrum	0 / 1 / None
		NM Configuration	Boot Mode Override	0 / 1 / None
			Boot Mode	Performance Optimized / Power Optimized
			Cores Disable Override	0 / 1 / None
			Cores To Disable	Min=0x0, Max=0x7f
			Power Measurement Override	0 / 1 / None
			Power Measurement	Enable / Disable
			Hardware Change Override	0 / 1 / None
			Hardware Changed	Yes / No

4.4.7 PCH Configuration

PCH Configuration						
PCH Devices	PCH state after G3	S0	S5	Last State		
PCH SATA Configuration	SATA Controller	Enable	Disable			
	Configure SATA as	AHCI	RAID			
	Support Aggressive Link Power Management	Enable	Disable			
	Port 0~7	Enable	Disable			
	SATA Port 0 DevSlp	Enable	Disable			
	Hot Plug	Enable	Disable			
	Configure as eSATA	Enable	Disable			
	Mechanical Presence Switch	Enable	Disable			
	Spin Up Device	Enable	Disable			
	SATA Device Type	Hard Disk Drive	Sata State Drive			
	SATA Topology	Unknown	ISATA	Direct Connect	Flex	M2
PCH sSATA Configuration	sSATA Controller	Enable	Disable			
	Configure sSATA as	AHCI	RAID			
	Support Aggressive Link Power Management	Enable	Disable			
	Port 0~5	Enable	Disable			
	sSATA Port 0~5 DevSlp	Enable	Disable			
	Hot Plug	Enable	Disable			
	Configure as eSATA	Enable	Disable			
	Spin Up Device	Enable	Disable			
	sSATA Device Type	Hard Disk Drive	Sata State Drive			
	SATA Topology	Unknown	ISATA	Direct Connect	Flex	M2
USB Configuration	USB Precondition	Enable	Disable			
	USB Per-Connector Disable	Enable	Disable			
	USB XHCI MSI Disable WA	Enable	Disable			
	XHCI Over Current Pins	Enable	Disable			
	XHCI Wake On Usb Enable	Enable	Disable			
	Place XHCI BAR below 4GB	Enable	Disable			
ADR Configuration	Enable/Disable ADR	Platform-POR	Enable	Disable		
	ADR GPIO	GPIO B	GPIO C			
	Host Partition Reset ADR Enable	Platform-POR	Enable	Disable		
	Enable/Disable ADR Timer	Platform-POR	Enable	Held-off		
	ADR timer expire time	Platform-POR	0 uS	25 uS	50 uS	100 uS
	ADR timer multiplier	Platform-POR	x1, x8, x24, x40, x56, x64, x72, x80, x88, x96			

4.4.8 H2O IPMI Configuration

H2O IPMI Configuration			
IPMI Support	Enable	Disable	
BMC Warmup Time	Min=0, Max=240		
ACPI SPMI Table	Enable	Disable	
Boot Option Support	Enable	Disable	
Set BIOS version to BMC	Enable	Disable	
BMC Configuration	Watchdog Timer Support	Enable	Disable
	Not disable in OS	Enable	Disable
	Watchdog Timer Timeout	Min=2, Max=8	
	Watchdog Timer Action	No Action	Hard Reset
		Power Down	Power Cycle
	Power Cycle Time Support	Enable	Disable
	Power Cycle Time	Min=0, Max=255	
	Power Button	Enable	Disable
	Reset Button	Enable	Disable
	NMI Button	Enable	Disable
	LAN Port Configuration	Dedicated	Shared
	LAN Channel Number	Min=0, Max=15	
	IPv4 Source	Static	DHCP
	IPv6 Mode	Enable	Disable
	IPv6 Prefix Length	Min=0, Max=255	
SDR List	SDR List Support	Enable	Disable

4.4.9 APEI Configuration

APEI Configuration					
ACPI Platform Error Interface	APEI Support	Enable		Disable	
	APEI Error Injection	MEMORY_CE	MEMORY_UE_NON_FATAL	MEMORY_UE_FATAL	PCIE_CE
		PCIE_UE_NON_FATAL	PCIE_UE_FATAL	Disable	
	Defrag Level	ROM Space under 1/4	ROM Space under 1/3	ROM Space under 1/2	Every time When Error Occur
	APEI UEFI Revision	UEFI 2.2		UEFI 2.3.1	

4.4.10 Console Redirection

Console Redirection									
Console Serial Redirection Setup	Console Serial Redirect	Enable				Disable			
	Terminal Type	VT_100		VT_100+		VT_UTF8		PC_ANSI	
	Baud Rate	1200	2400	4800	9600	19200	38400	57600	[115200]
	Data Bits	7 Bits				8 Bits			
	Parity	Even		Odd		None			
	Stop Bits	1 Bits				2 Bits			
	Flow Control	RTS/CTS		XON/XOFF		None			
	Information Wait Time	0 Second	2 Second	5 Second		10 Second		30 Second	
	C.R. After Legacy Boot	Yes				No			
	Text Mode Resolution	AUTO	Force 80x25	Force 80x24 (DEL FIRST ROW)		Force 80x24 (DEL LAST ROW)		Limit 128x40 (Default)	
	Auto Refresh	Enable				Disable			
	Auto adjust Terminal resolution	Enable				Disable			

4.4.11 H2O Event Log Config Manager

H2O Event Log Config Manager						
Configuration Pages	BIOS Event Log Configuration	BIOS Event Log Viewer	Log Event To	ALL	BIOS	
				BMC SEL	Memory	Disable
			Event Log Full option	Overwrite	Clear All	Stop Logging
	POST Message Configuration	POST Message Configuration		Enable	Disable	
		Progress Code		Enable	Disable	
		Error Code		Enable	Disable	
		Debug Code		Enable	Disable	
		Log POST Message		Enable	Disable	
		Show POST Message		Enable	Disable	
	Serial Debug Message Configuration	EFI DEBUG Message Configuration	Advanced Mode	Enable	Disable	
			DEBUG_INIT	Enable	Disable	
			DEBUG_WARN	Enable	Disable	
			DEBUG_LOAD	Enable	Disable	
			DEBUG_FS	Enable	Disable	
			DEBUG_INFO	Enable	Disable	
			DEBUG_ DISPATCH	Enable	Disable	
			DEBUG_ VARIABLE	Enable	Disable	
			DEBUG_BM	Enable	Disable	
			DEBUG_BLKIO	Enable	Disable	
			DEBUG_NET	Enable	Disable	
			DEBUG_UNDI	Enable	Disable	
			DEBUG_ LOADFILE	Enable	Disable	
			DEBUG_EVENT	Enable	Disable	
			DEBUG_GCD	Enable	Disable	
			DEBUG_CACHE	Enable	Disable	
			DEBUG_ VERBOSE	Enable	Disable	
			DEBUG_ERROR	Enable	Disable	
			EFI DEBUG Message Level	Enable	Disable	
		Status Code Serial Message Configuration	Show Progress Code Serial Message	Enable	Disable	
			Show Error Code Serial Message	Enable	Disable	
			Show Debug Code Serial Message	Enable	Disable	
Event And Message Pages	BIOS Event Log Viewer	Show BIOS Event Log				
	Serial Debug Message Viewer					

4.4.12 H2oUve Configuration

H2oUve Configuration			
H2oUve Setup	H2OUVE Support	Enable	Disable

4.5 Security

Security Option Key:

4.5.1 Security

Security			
Current TPM Device	Not Detected	TPM 1.2	TPM 2.0
TPM Active PCR Hash Algorithm	SHA1, SHA256		
TPM Hardware Supported Hash Algorithm	SHA1, SHA256		
TrEE Protocol Version	1.0	1.1	
TPM Availability	Available	Hidden	
TPM Operation	No operation	Disable and Deactivate	Enable and Activate
Clear TPM	0	1	None
Power on Password	Enable	Disable	

4.6 Power

Power Option Key:

4.6.1 Power

Power		
Wake on PME	Enable	Disable

4.7 Boot

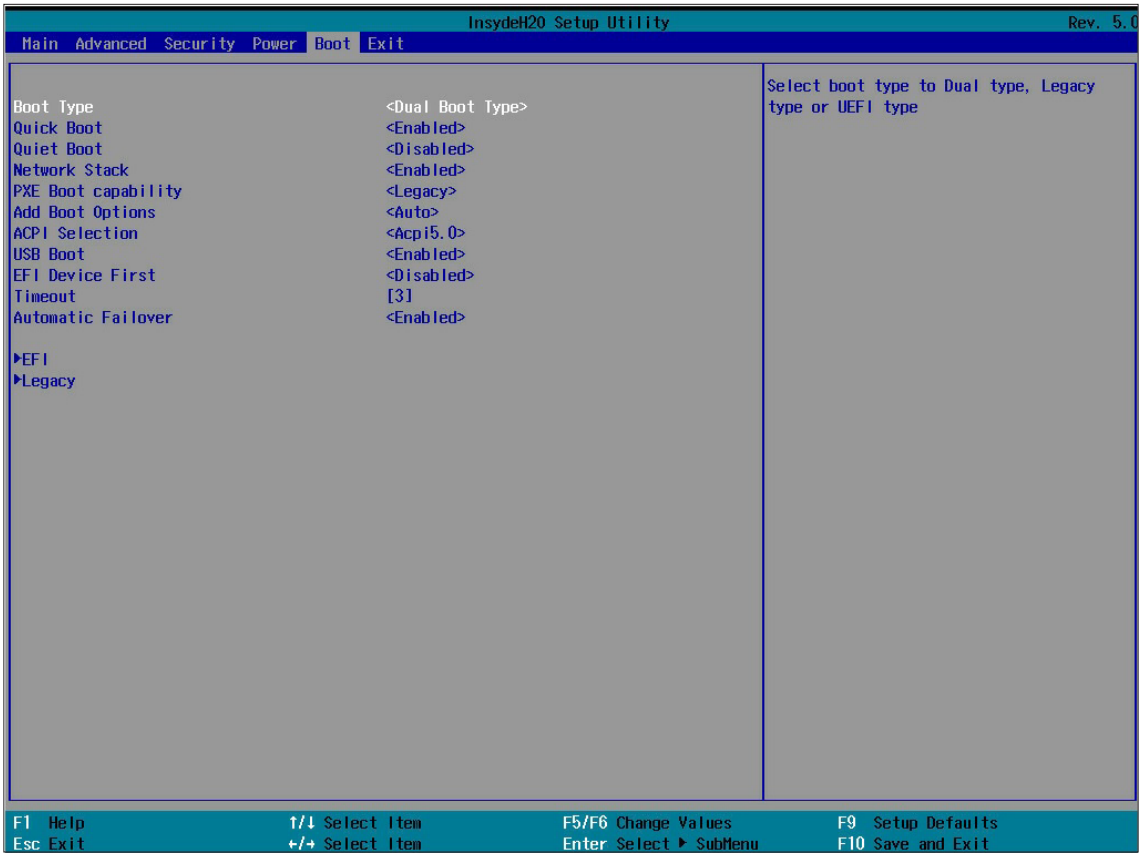

Boot Option Key:

4.7.1 Boot

Boot					
Boot Type	Dual Boot Type		Legacy Boot Type		UEFI Boot Type
Quick Boot	Enable		Disable		
Quiet Boot	Enable		Disable		
Network Stack	Enable		Disable		
PXE Boot capability	Disable		UEFI:IPv4		UEFI:IPv6
	UEFI:IPv4/UEFI:IPv6		Legacy		
Add Boot Options	First		Last		Auto
ACPI Selection	Acpi1.0B		Acpi3.0		Acpi4.0
	Acpi5.0		Acpi6.0		Acpi6.1
USB Boot	Enable		Disable		
EFI Device First	Enable		Disable		
Timeout	Min=0, Max=10				
Automatic Failover	[Enable]		Disable		
EFI	Normal Boot Menu		Normal		Advance
	Boot Type Order		Hard Disk Drive CD/DVD-ROM Drive USB PXE Other Device		
	Other Device				
Legacy	Boot Device Priority	Normal Boot Menu	Normal		Advance
	Boot Type Order		Floppy Drive Hard Disk Drive CD/DVD-ROM Drive USB Others		
	USB				

4.8 Exit

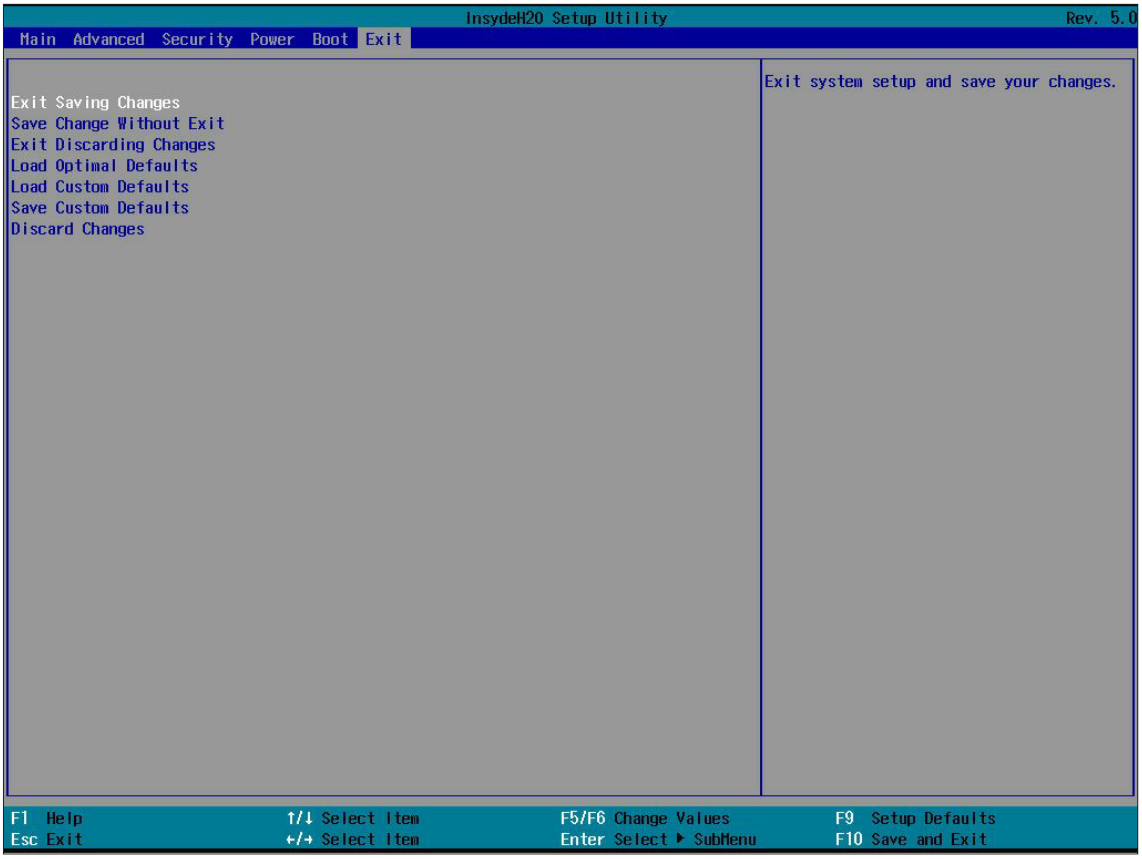

Exit Option Key:

4.8.1 Exit

Exit	
Exit Saving Changes	Exit system setup and save your changes.
Save Change Without Exit	Save your changes without exiting the system.
Exit Discarding Changes	Discard your changes when existing the system.
Load Optimal Defaults	Load optimal default items.
Load Custom Defaults	Resets the BIOS settings to the default values and overwrites any previously customized settings.
Save Custom Defaults	Saves the cumostomized defaults in BIOS settings.
Discard Changes	Discard your changes.

4.9 BIOS Update Process

This is the manual for updating BIOS on **Vela** system, the new BIOS supports to update from BIOS ver Vela1070 or later. Here are the update procedures

DOS:
1. Copy Vela1080.bin into **dos** folder
2. Copy dos folder to USB stick or HDD
3. Enter to DOS folder and execute the below command flash.bat
4. Reboot if complete the updated

Linux:
1. Copy Vela1080.bin into linux/ InsydeH2OFFT_x86_LINUX64_200.02.00.02 folder
2. Copy linux folder to USB stick or HDD
3. Enter to linux folder and execute the below command./flash.sh
4. Reboot if complete the updated

EFI:
1. Copy Vela1080.bin into **efi** folder
2. Copy efi folder to USB stick or HDD
3. Boot into internal shell enters the usb efi folder and executes the below command Bios.nsh
4. Reboot if complete the updated

NOTE
Please refer to “Bios Update Process.doc” in bios release zip file for details.

Chapter 5. BMC Configuration Settings

5.1 Login

NOTE This feature works with the JAVA 6 run time installed console environment.

The BMC default IP source is DHCP. The IP address can be configured in H2O IPMI configuration as demonstrated by the example below.

Step 1 Open the browser and then type in the BMC IP address.
IP address example: 192.168.22.108

Step 2 Use the default user name and password for first-time BMC WEB GUI login.

Field:	Default
UserName:	admin
Password:	admin

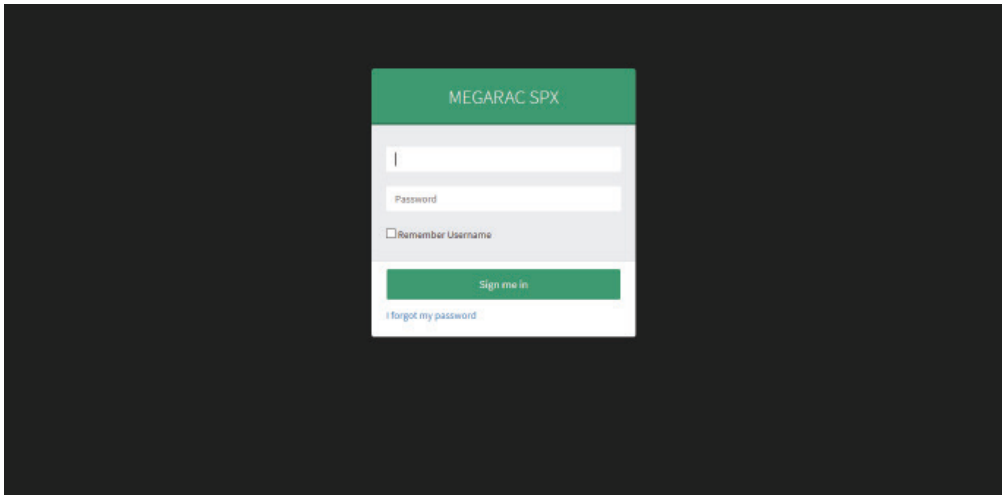

NOTE
The default user name and password are in lower-case characters.
Users who login with the root user name and password will have full administrative power. The root password can be changed after login.

5.2 Web GUI

5.2.1 Menu Bar

Click to select the options of the menu bar.

Menu	Description
Dashboard	The Dashboard page gives the overall information about the status of a device.
Sensor	The Sensor Readings page displays all the sensor related information.
FRU Information	The FRU Information page displays the details for FRU devices in the system.
Logs and Reports	The Logs and Reports page monitors and reports on the status of IPMI event.
Settings	The Settings page allows you to configure various basic settings, such as date & time, KVM Mouse, Services and ect.
Remote Control	The Remote Control page allows you to remotely manage server hardware components.
Image Redirection	The Image Redirection page is used to configure the image into BMC for redirection.
Power Control	The Power Control page allows you to view and control the power of your server.
Maintenance	This group of pages allows you to do maintenance tasks on the device.
Sign out	The Sign out page allows you to log out of the web GUI.

5.2.2 User Information and Quick Button

The user information and quick access buttons are located at the top right corner. It displays the logged-in user, his/her privilege and the four quick buttons allowing you to perform different functions.

Button		Description
User		Only valid commands are allowed.
Operator		All BMC commands are allowed except for the configuration commands that can change the behavior of the out-of-hand interfaces.
Administrator		All BMC commands are allowed.
No access		Login access denied.
	Notification	Click to view notification messages.
	Sync	Click to synchronize with the latest sensor and event log updates.
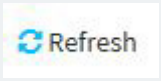	Refresh	Click to reload the current page.
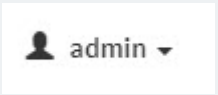	Administrator	**Sign out**: Click to log out of the GUI **Profile:** Click to enter the User Management Configuration dialog box in figure xx.
	Help	Click to view more details on field descriptions.

5.2.3 Dashboard

The Dashboord page displays device, system and network information.
Click **Dashboard** on the menu bar to view the overall information of the server.

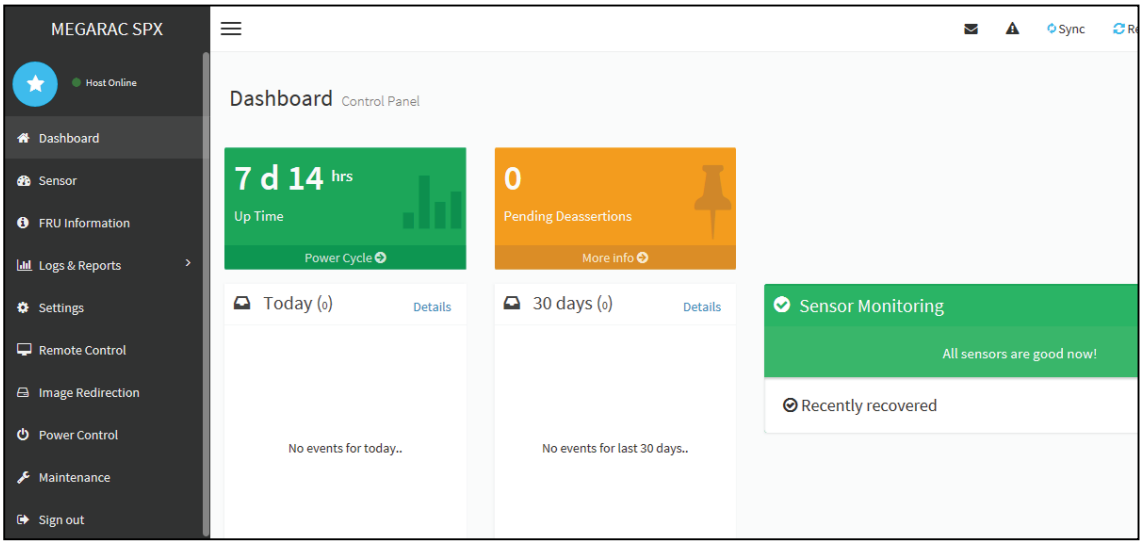

5.2.4 Sensor

The Sensor page displays the status and records on related sensors.
Click a record to view detailed information on a particular sensor.

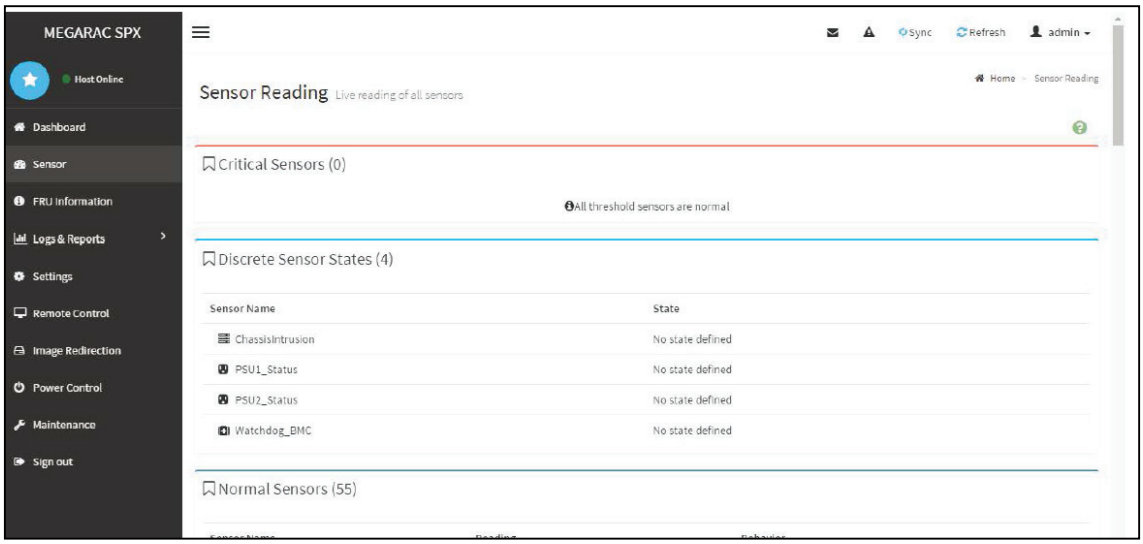

5.2.5 FRU Information

The FRU Information page displays Basic Information, Chassis Information, Board Information and Product Information of the FRU device. Click **FRU Information** on the menu bar to view the details of the selected device.

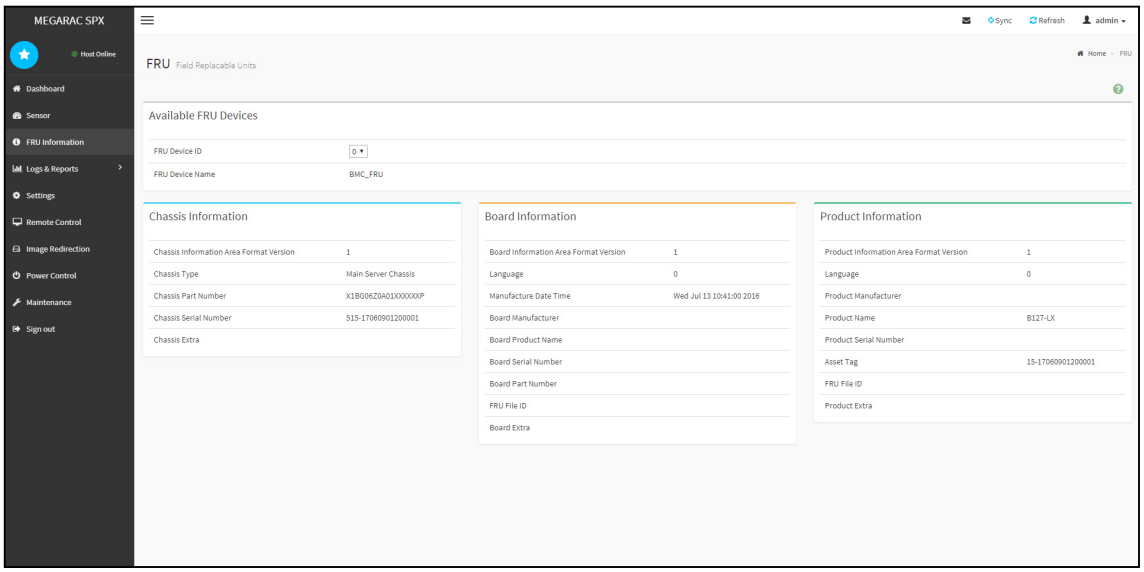

5.2.6 Logs and Reports

The System Inventory page displays IPMI Event Log and Video Log. Click **Logs and Reports** from the menu bar→ select **Event Log** or **Video Log** to view the contents.

Event Log

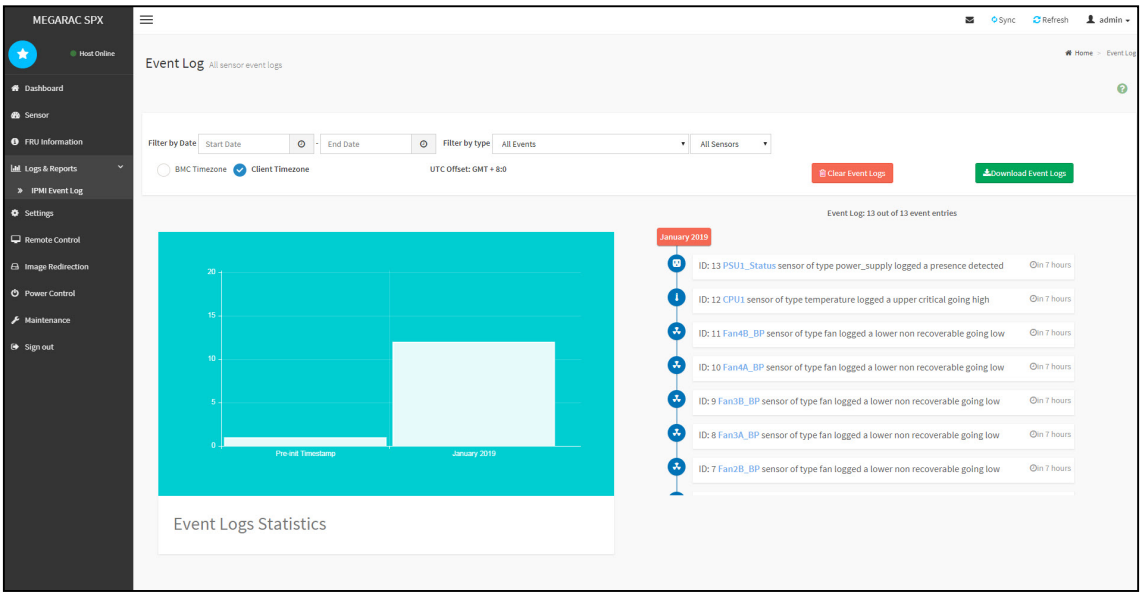

5.2.7 Settings

The Settings page displays the configuration settings for KVM Mouse Setting, Media Redirection Settings, Network Settings, Platform Event Filter, Services, SMTP Settings, SSL Settings, System Firewall, User Management and Video Recording.

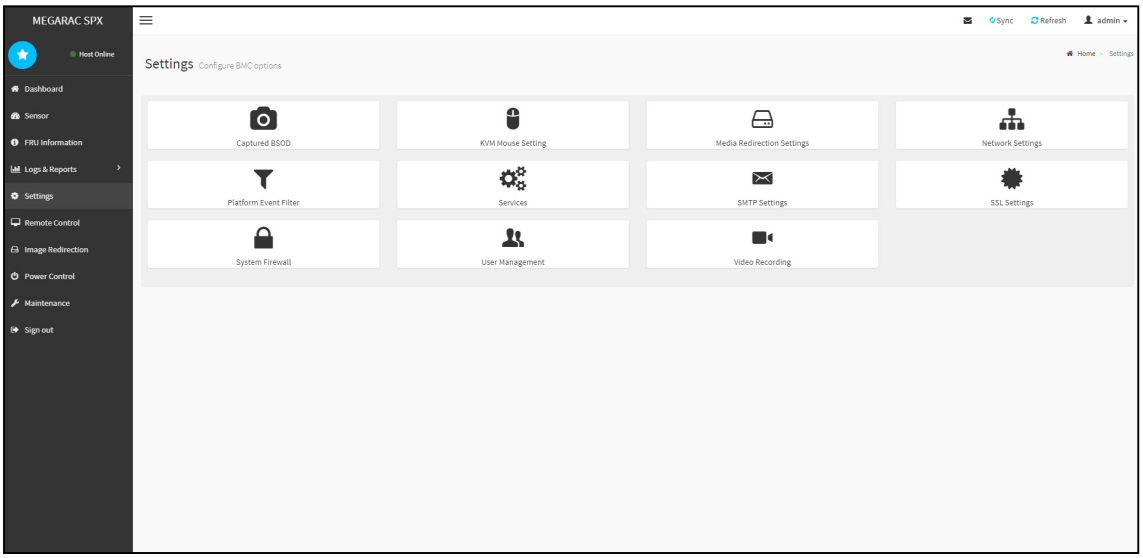

Settings Menu and Option Keys:

Settings						
KVM Mouse Setting	Mouse Mode Configuration • Relative Positioning (Linux) • Absolute Positioning (Windows) • Other Mode (SLES-11 OS Installation)					
Media Redirection Settings	General Settings		VMedia Instance Settings		Remote Session	
Network Settings	Network Settings	Network Link Configuration	DNS Configuration	Sideband Interface (NC-SI)		
Platform Event Filter	Event Filters		Alert Policies		LAN Destinations	
Services						
SMTP Settings	SMTP Settings					
SSL Settings	View SSL certificate		Generate SSL certificate		Upload SSL certificate	
System Firewall	Generate Firewall Settings		IP Address Firewall Rules		Port Firewall Rules	
	Existing Firewall Settings	Add Firewall Settings	Existing IP Rules	Add New IP rule	Existing Port Rules	Add New Port Rule
User Management						
Video Recording	Auto Video Settings					
	Video Trigger Settings		Video Remote Settings		Pre-Event Video Recordings	

5.2.8 Remote Control

The Remote Control page displays the configuration for power control and remote KVM.

Launch KVM

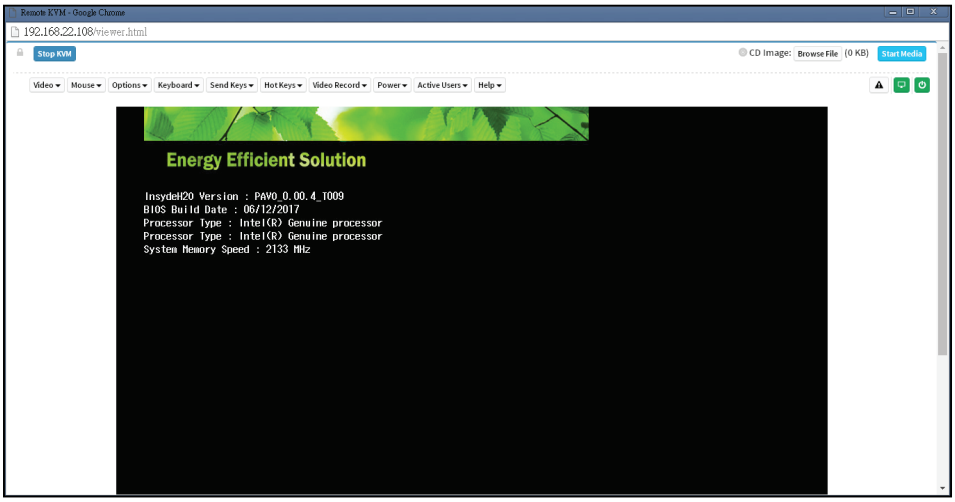

Procedure To Start KVM

Step 1 Click **Start KVM** to start the H5Viewer video redirection.

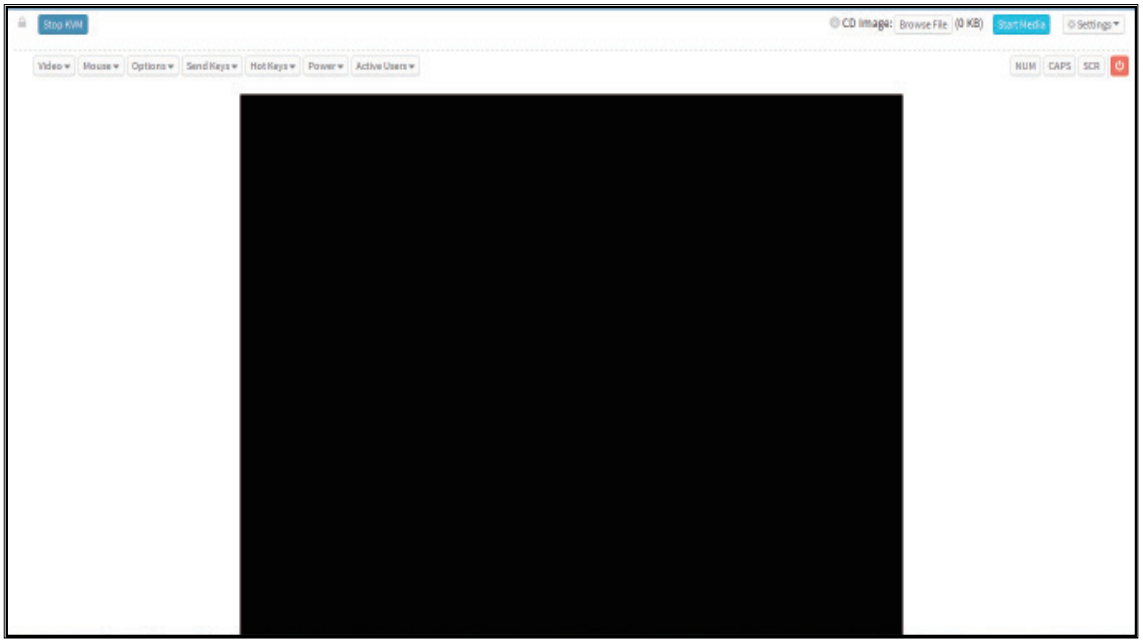

Step 2 Click **Browse** to select CD Image.

Step 3 Click **Start Media** to redirect the selected CD image file to the Host.

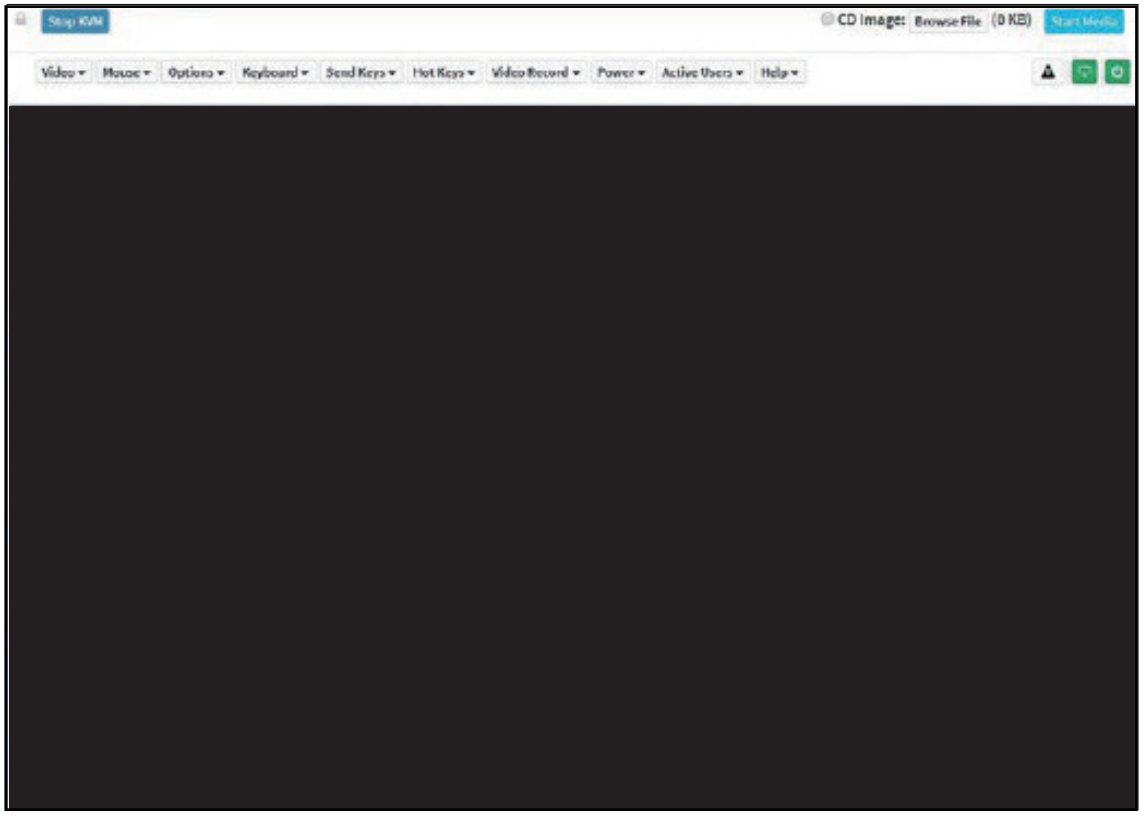

Step 4 To stop the recording, click **Stop Record**.

Remote KVM Menu and Option Key

Button	Description		
Start KVM	Starts the H5Viewer video redirection.		
Stop KVM	Stops the H5Viewer video redirection.		
Video Record	Pause Video	This option is used for pausing Console Redirection.	
	Resume Video	This option is used to resume the Console Redirection when the session is paused.	
	Refresh Video	This option can be sued to update the display shown in the Console Redirection window.	
	Host Display	Display on	If you disable this option, the display will be shown on the screen in Console Redirection.
		Display off	If you enable this option, the server display will be blank but you can view the screen in Console Redirection. If you disable this option, the display will be back in the server screen.
	Capture Screen	This option helps to take the screenshot of the host screen and save it in the client's system.	
Mouse	Show Client Cursor	This menu item can be used to show or hide the local mouse cursor on the remote client system.	
	Mouse Mode	This option handles mouse emulation from local window to remote screen using either of the two methods. Only 'Administrator' has the right to configure this option. • Absolute mouse mode: The absolute position of the local mouse is sent to the server if this option is selected. • Relative mouse mode: The Relative mode sents the calculated relative mouse potion displacement to the server if this option is selected. • Other mouse mode: This mouse mode sets the client cursor in the middle of the client system and will send the deviation to the host. This mouse mode is specific for SUSE Linux installation.	
	NOTE Client cursor will be hidden always. If you want to enable, use Alt + C to access the menu.		
Options	Block Privilege Request	To enable or disable the access privilege of the user.	
	Keyboard/ Mouse Encryption	This option allows you to encrypt keyboard inputs and mouse movements sent between the connections	
Keyboard	Keyboard Layout	List of Host Physical Keyboard languages supported in H5Viewer. 1. English US 2. German 3. Japanese	
Video Record	Record Video	This option is to start recording the screen.	
	Stop Recording	This option is used to stop the recording.	
	Record Settings	This option is used to set Video Recording Duration.	

Send Keys	Hold Down	Right <Ctrl>	This menu item can be used to act as the right-side <CTRL> key when in Console Redirection.
		Right <Alt>	This menu item can be used to act as the right-side <ALT> key when in Console Redirection.
		Right <Window>	This menu item can be used to act as the right-side <WIN> key when in Console Redirection.
		Left <Ctrl>	This menu item can be used to act as the left-side <CTRL> key when in Console Redirection.
		Left <Alt>	This menu item can be used to act as the left-side <ALT> key when in Console Redirection.
		Left <Window>	This menu item can be used to act as the left-side <WIN> key when in Console Redirection. You can also decide how the key should be pressed: Hold Down or Press and Release.
	Press and Release	<Ctrl> + <Alt> + <Del>	This menu item can be used to act as if you depressed the <CTRL>, <ALT> and <DEL> keys down simultaneously on the server that you are redirecting.
		Left <Windows>	This menu item can be used to act as the left-side <WIN> key when in Console Redirection. You can also decide how they key should be pressed: Hold Down or Press and Release.
		Right <Windows>	This menu item can be used to act as the right-side <WIN> key when in Console Redirection.
		<Context Menu>	This menu item can be used to act as the context menu key, when in Console Redirection.
		<Print Screen>	This menu item can be used to act as the print screen key, when in Console Redirection.
Hot Keys	Add Hot Keys	This menu is used to enable macros. Click Add to macros.	
Power	Power Reset	To reboot the system without powering off (warm boot).	
	Immediate Shutdown	Power Off the server immediately.	
	Orderly Shutdown	Soft power off.	
	Power On	To power on the server.	
	Power Cycle	To first power off and then reboot the system (cold boot).	
Active Users	Read only. Displays active user and their system IP address.		
Help	Read only. Displays information about H5viewer		

5.2.9 Power Control

The Power Control page allows you to view and control the power of your server. To open Power Control, click **Power Control** from the menu bar.

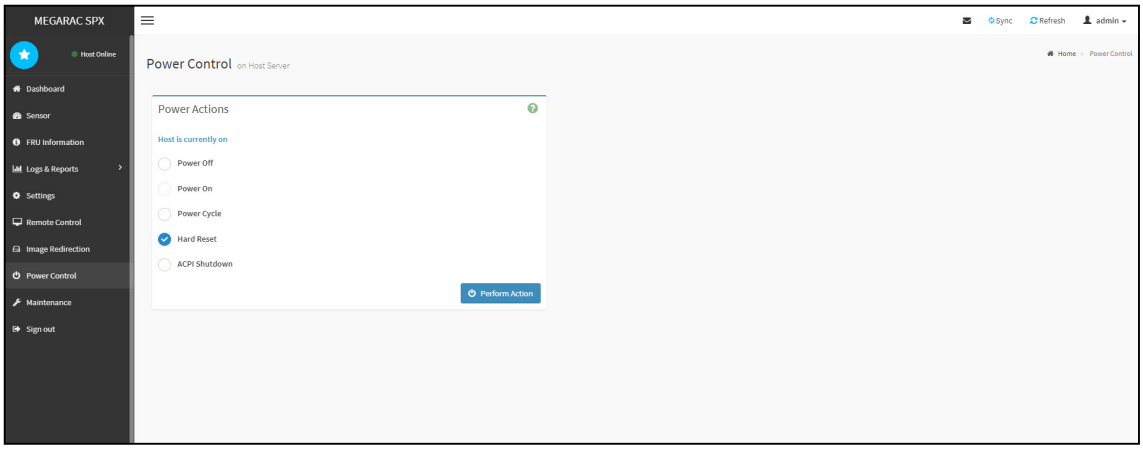

The various options of Power Control are given below.

Power Off: To immediately power off the server.

Power On: To power on the server.

Power Cycle: This option will first power off and then reboot the system (cold boot).

Hard Reset: This option will reboot the system without powering off (warm boot).

ACPI Shutdown: This option to initiate operating system shutdown prior to the shutdown.

Perform Action: Click this option to perform the selected operation.

5.2.10 Maintenance

This Maintenance page displays the configuration settings for Backup Configuration, Firmware Image Location, Firmware Information, Fimware Update, Preserve Configuration, Restore Configuration, Restore Configuration and Restore Factory Defaults.

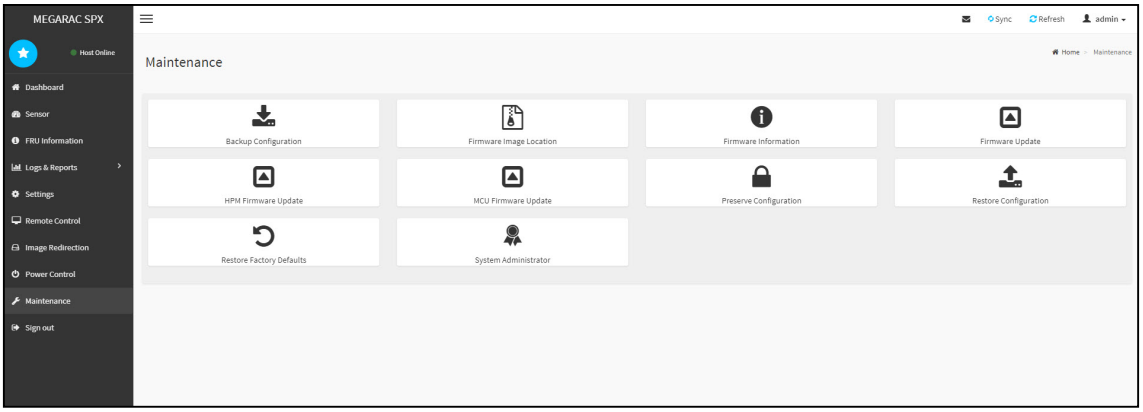

Maintenance	Procedure
Backup Configuration	1. Click Check All to backup the selected configuration items. The Backup Configuration page will appear **Click Download Config** to save the backup file to the client system 2. Click **OK** to perform the backup action. The Backup file will be saved in the client system. 3. Click **Cancel** to cancel the backup process.
Firmware Image Location	1. Click the configuration items on the list. 2. Click **Save** to save any changes made.
Firmware Information	Read only.
Firmware Update	This wizard takes you through the process of firmware upgradation. A reset of the box will automatically follow if the upgrade is completed or cancelled. An option to Preserve All Configuration is available. Enable it, if you wish to preserver configured settings through the upgrade. Click **Start Firmware Update** to start the firmware update process.
Preserve Configuration	This page allows the user to configure the preserve configuration items, which will be used by the Restore factory defaults to preserve the existing configuration without overwriting with defaults/Firmware Upgrade configuration. Click **Save** to save any changes made.
Restore Configuration	1. Click **Upload** to restore the backup files. 2. Click **OK** to upload the new configuration file and restore.
Restore Factory Defaults	1. Click the configuration items on the list to preserve the settings during restore factory default configuration. 2. Click Restore Factory Defaults to restore the factory defaults of the device firmware.

5.2.10.1 Firmware Update

This wizard takes you through the process of firmware upgradation. A reset of the box will automatically follow if the upgrade is completed or cancelled. An option to Preserve All Configuration is available. Enable it, if you wish to preserve configured settings through the upgrade.

Warning: Please note that after entering update mode widgets, other web pages and services will not work. All open widgets will be closed automatically. If upgrade process is cancelled in the middle of the wizard, the device will be reset.

NOTE

The firmware upgrade process is a crucial operation. Make sure that the chances of a power or con¬nectivity loss are minimal when performing this operation.

Once you enter into Update Mode and choose to cancel the firmware flash operation, the Mega¬RAC® card must be reset. This means that you must close the Internet browser and log back onto the MegaRAC® card before you can perform any other types of operations.

Once Firmware upgrade using web is started, the regular IPMI command will not be allowed for safety concern if Enable IPMI Command handling during flashing support is disabled in project configuration.

To configure, choose Firmware Image Location under Maintenance. To open Firmware Update page, click Maintenance → Firmware Update from the menu bar.

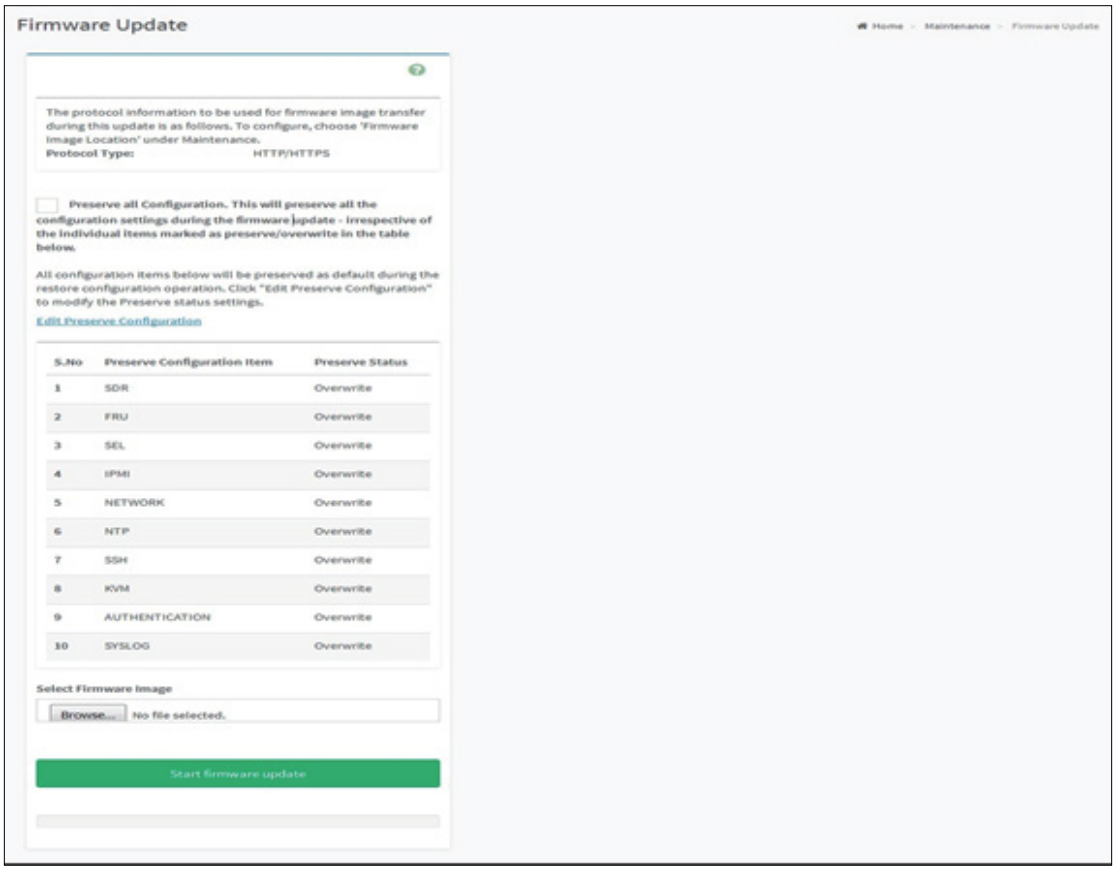

Firmware Update page

The various fields of Firmware Update are as follows.

- Preserve all Configuration: To preserve all configuration.
- Edit Preserve Configuration: To modify the Preserve status settings.
- Select Firmware Image: To Select the Firmware image to be uploaded.
- Start Firmware Update: To Start the Firmware Update.

This wizard takes you through the process of AMI based firmware upgradation. The protocol information to be used for firmware image transfer during this update is as follows.

> **NOTE**
> All configuration items will be preserved/overwrite as default during the restore configura- tion operation.

Procedure

1. Click Preserve all Configuration to preserve all configuration.
2. Click Browse to select firmware image. The Firmware update undergoes the following steps:
   a. Closing all active client requests
   b. Preparing Device for Firmware Upgrade
   c. Uploading Firmware Image

> **NOTE**
> A file upload pop-up will be displayed for http/https but in the case of tftp files, the file is automatically uploaded displaying the status of upload.

   d. Browse and select the Firmware image to flash and click Upload.
   e. Click Start firmware update start the Firmware Update. A warning message will be prompted you to proceed further.
   f. Click OK to start the Firmware Update. The sample screenshot is shown below.

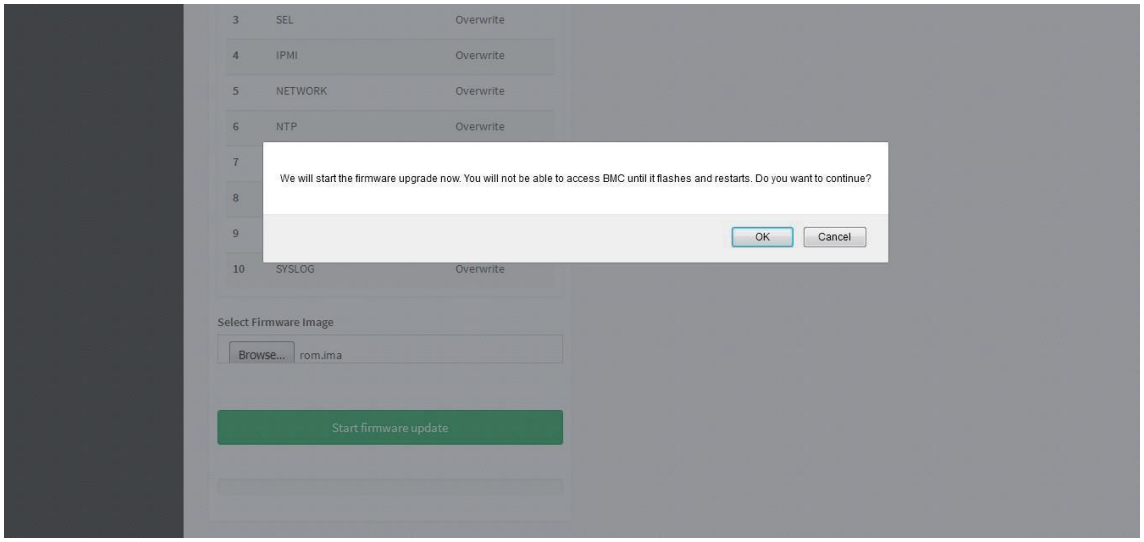

Firmware Update page - Image Upload

g. Verifying Firmware Image

In Section Based Firmware Update, you can configure the firmware image for section based flashing. Check the required sections and click Proceed to update the firmware.

If flashing is required for all images, select the option Full Flash .

If you select Version Compare Flash option from web, the current and uploaded module versions, FMHlocation, size will be compared.

If the modules di□er in size and location, proceed with force firmware upgrade. Ifallthem oduleversionsaresame,restartBMCbysayingallthemoduleversionsaresimilar.

If only few module versions are di□er, those module will be flashed.

NOTE
Only selected sections of the firmware will be updated. Other sections are skipped. Before starting flash operation, you are advised to verify the compatibility between image sections.

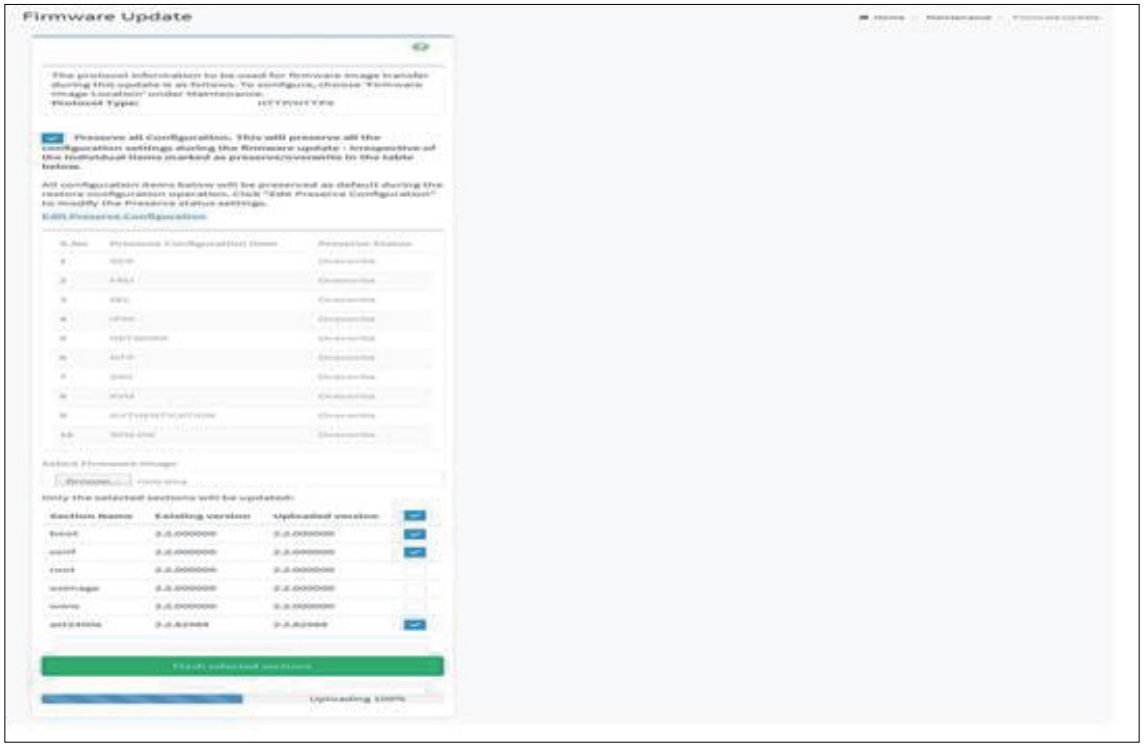

Section Based Firmware Flashing

h. Flashing Firmware Image
i. Resetting the image. The samplae screenshot of Firmaware update is as shown below.

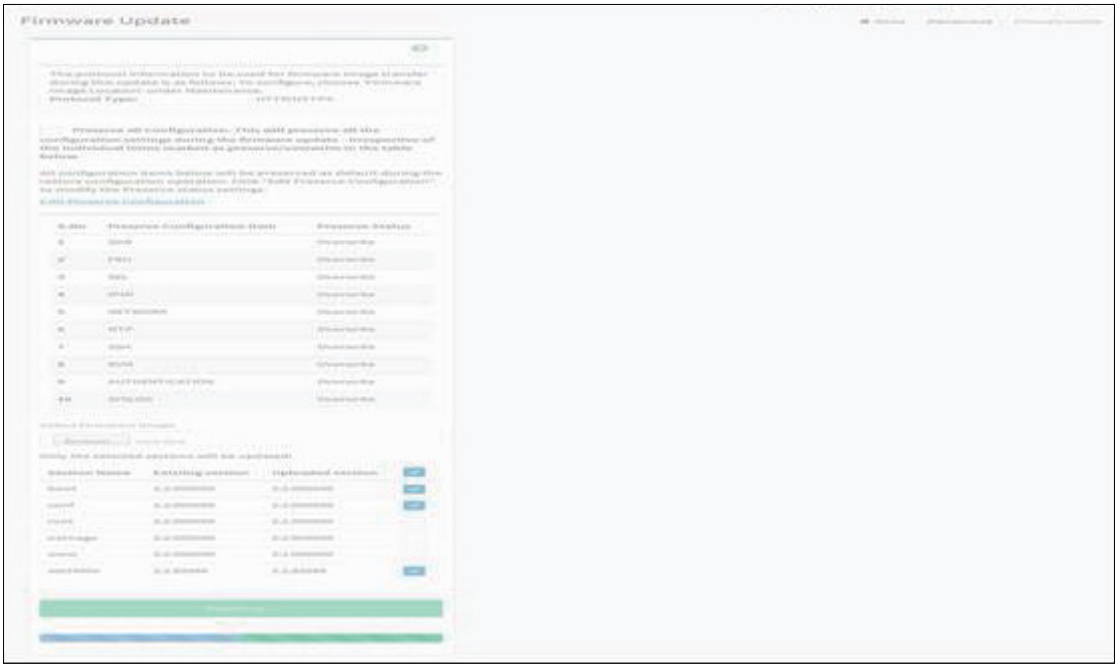

Firmware Update page

NOTE
The Firmware Update page will be disabled and you will not be able to perform any other tasks until firmware upgrade is completed and the device is rebooted. You can now follow the in- structions presented in the subsequent pages to successfully update the card's firmware. The device will reset if update is canceled. The device will also reset upon successful completion of firmware update.

5.2.10.2 BIOS Firmware Update

This wizard takes you through the process of host BIOS firmware upgradation. A screenshot of BIOS Firmware Update is as shown below.

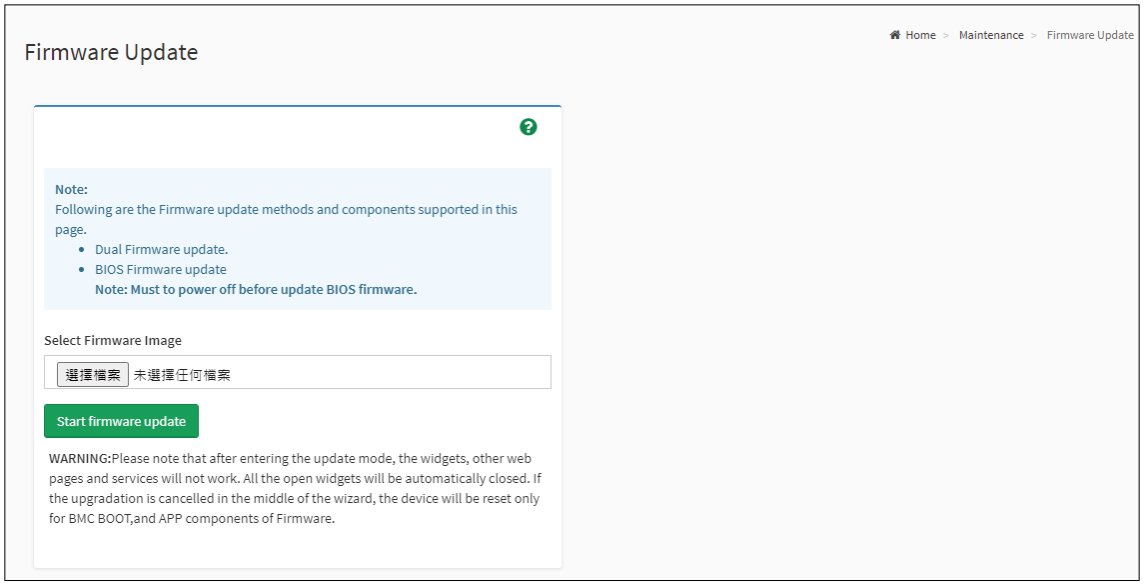

BIOS Firmware Update page

NOTE
The host will be forced to shutdown, if it is power on.

The various are listed below.

Select Firmware Image: Click Browse to select the HPMBIOS firmware update in .binhpm format.

Start Firmware Update: The firmware update will be started to flash.

Procedure to proceed BIOS Firmware Update

1. The Firmware update undergoes the following steps:
   a. Click Browse and select the Firmware image to be flashed and click Start Firmware update to upgrade the current device firmware.
   b. Preparing Device for Firmware Upgrade.
   c. Uploading Firmware Image.
   d. Flashing the image. The sample screenshot of BIOS Firmware update is as shown below.

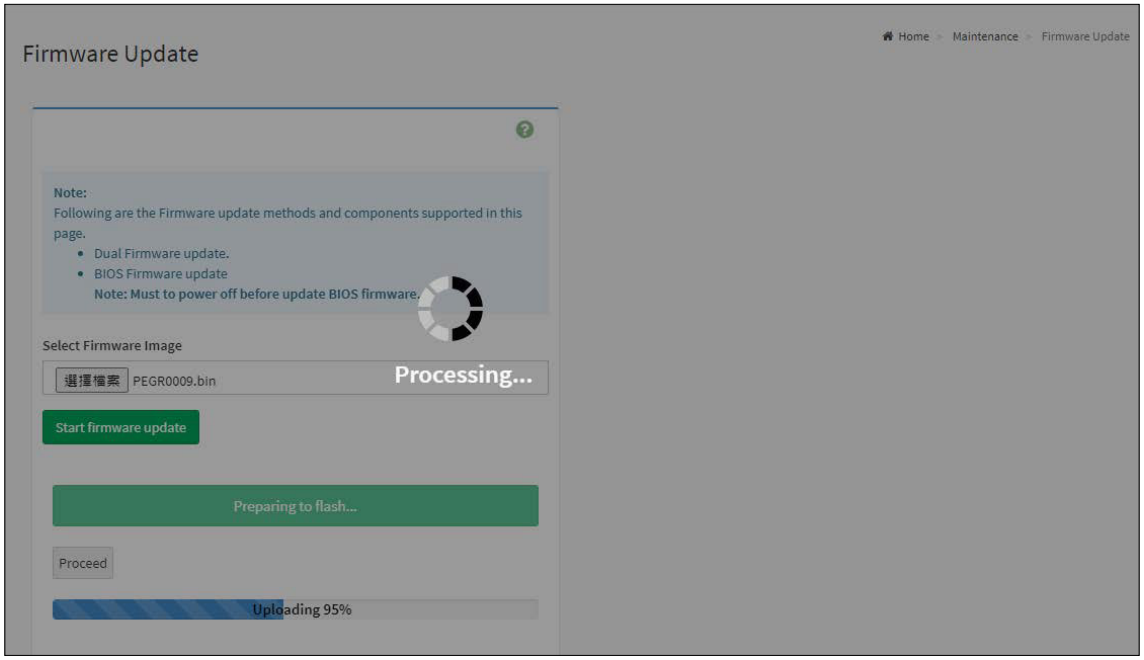

BIOS Firmware Update page

NOTE
You will not be able to perform any other tasks until firmware upgrade is completed and the device is off.

5.2.11 Sign out

To log out of the BMC:

Method 1: Click Sign out from the menu bar. The Logout dialog box will pop out.

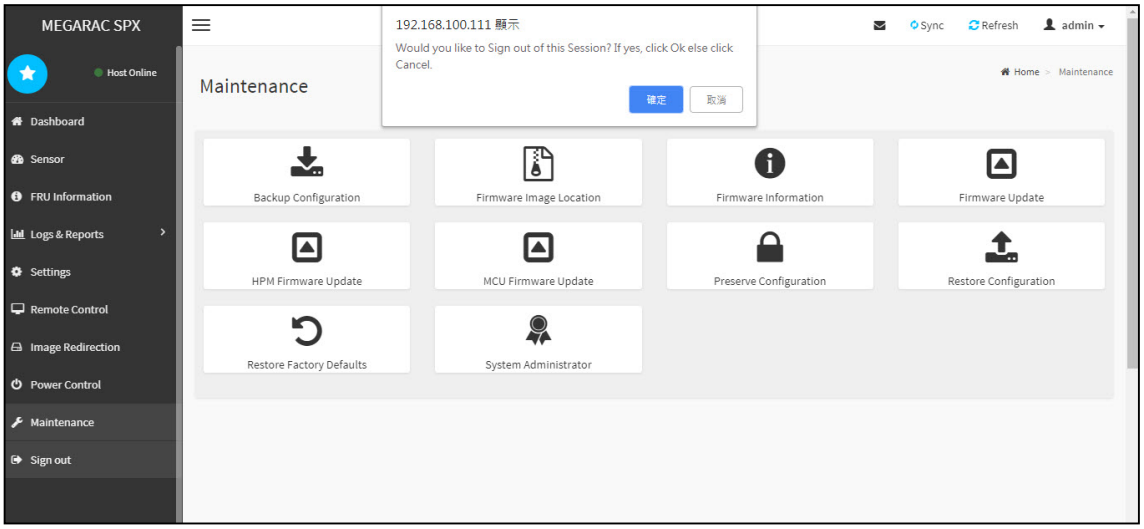

Method 2: Click the root quick button on the top right corner of the screen.

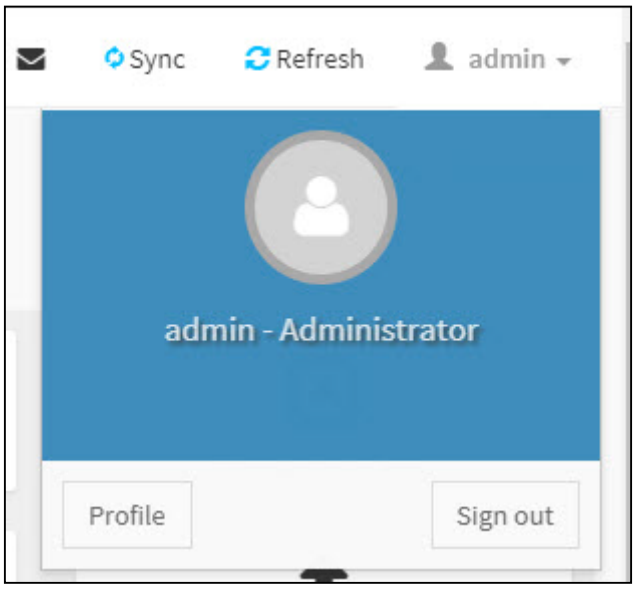

Chapter 6. Technical Support

www.aicipc.com

Taiwain, Global Headquarters
Address: No. 152, Section 4, Linghang N. Rd, Dayuan District, Taoyuan City 337, Taiwan
Tel: +886-3-433-9188
Fax: +886-3-287-1818-
Sales Email: sales@aicipc.com.tw
Support Email: support@aicipc.com

Shanghai, China
Address: Room 215, Building 4, No.471 Guiping Road, Xuhui District, Shanghai City, 200233 China
Tel: +86-21-54961421
Sales Email: sales@aicipc.com.cn
Support Email: support@aicipc.com

Moscow, Russia
Address: No. 500, 5th Floor, 5th Entrance, 32A, Khoroshevskoye Shosse, Moscow, 123007
Tel: +7-4997019998
Sales Email: support-ru@aicipc.com.tw
Support Email: rma.russia@aicipc.com.tw

North California, United States
Address: 48531 Warm Springs Boulvard Suite 404 Fremont, CA 94539, United States
Tel: +1-510-573-6730
Sales Email: sales@aicipc.com
Support Email: support@aicipc.com

South California, United States
Address: 21808 Garcia Lane City of Industry, CA 91789, United States
Toll free: + 1-866-800-0056
Tel: +1-909-895-8989
Fax: + 1-909-895-8999
Sales Email: sales@aicipc.com
Support Email: support@aicipc.com

New Jersey, United States
Address: 322 Route 46 West Suite 100 Parsippany, NJ 07054 United States
Tel: +1-973-884-8886
Fax: +1-973-884-4794
Sales Email: sales@aicipc.com
Support Email: support@aicipc.com

Houten, The Netherlands
Address: Peppelkade 58, 3992AK, Houten, The Netherlands
Tel: +31-30-6386789
Fax: +31-30-6360638
Sales Email: sales@aicipc.nl
Support Email: support@aicipc.com

For additional technical support or questions about trouble shooting, please contact the AIC® representative nearest to you or visit our AIC® website for more information.
AIC® website: https://www.aicipc.com/en/faq.