SB122-PH
Storage Server Barebone

User's Manual

UM_SB122-PH_v.2_122215

CONTENTS

PREFACE..... i
SAFETY INSTRUCTIONS..... ii
Chapter 1. Prodcut Introduction 1
1.1 Box Content 1
1.2 Specifications 2
1.3 General Information.....3
Chapter 2. Hardware Installation 6
2.1 Central Processing Unit (CPU) 6
2.2 System Memory 14
2.3 Removing and Installing Chassis Top Cover 18
2.4 Removing/Installing a Drive Tray/ Hard Drive/ Drive Slot Map....19
2.5 Removing and Installing a Fan Module 20
2.5.1 Removing a fan module 20
2.6 Removing and Installing a PSU Module 22
2.7 Replacing the PCIe Card and Riser Assembly 23
2.8 Tool-less Blade Slide Installation introduction 25
Chapter 3. Motherboard Settings..... 29
3.1 Motherboard block diagram 29
3.2 Motherboard block diagram 30
3.3 Motherboard Content List.....31
3.4 Internal Connectors/Jumpers 32
3.5 LEDs.....39
Chapter 4. BIOS Configuration and Settings 42
4.1 Updating BIOS.....44
Chapter 5. BMC Configuration and Settings..... 46
5.1 Method 1 (Use the BIOS setup) 46
5.2 Method 2 (Use a Dos tool - Syscheck).....49
5.3 Connect to BMC 51
5.4 Updating BMC Firmware.....55

Chapter 6. Hardware Introduction..... 56

6.1 BACKPLANE HARDWARE INTRODUCTION.....56

6.2 RISER CARD HARDWARE INTRODUCTION 59

Chapter 7. Technical Support..... 63

Copyright © 2015 AIC, Inc. All Rights Reserved.

This document contains proprietary information about AIC products and is not to be disclosed or used except in accordance with applicable agreements.

PREFACE

- **Copyright**

  No part of this publication may be reproduced, stored in a retrieval system, or transmitted in any form or by any means, electronic, mechanical, photo-static, recording or otherwise, without the prior written consent of the manufacturer.

- **Trademarks**

  All products and trade names used in this document are trademarks or registered trademarks of their respective holders.

- **Changes**

  The material in this document is for information purposes only and is subject to change without notice.

- **Warning**

  1. A shielded-type power cord is required in order to meet FCC emission limits and also to prevent interference to the nearby radio and television reception. It is essential that only the supplied power cord be used.
  2. Use only shielded cables to connect I/O devices to this equipment.
  3. You are cautioned that changes or modifications not expressly approved by the party responsible for compliance could void your authority to operate the equipment.

- **Disclaimer**

  AIC shall not be liable for technical or editorial errors or omissions contained herein. The information provided is provided "as is" without warranty of any kind. To the extent permitted by law, neither AIC or its affiliates, subcontractors or suppliers will be liable for incidental, special or consequential damages including downtime cost; lost profits; damages relating to the procurement of substitute products or services; or damages for loss of data, or software restoration. The information in this document is subject to change without notice.

SAFETY INSTRUCTIONS

- Before getting started, please read the following important cautions:
- All cautions and warnings on the equipment or in the manuals should be noted.
- Most electronic components are sensitive to electrical static discharge. Therefore, be sure to ground yourself at all times when installing the internal components.
- Use a grounding wrist strap and place all electronic components in static-shielded devices. Grounding wrist straps can be purchased in any electronic supply store.
- Be sure to turn off the power and then disconnect the power cords from your system before performing any installation or servicing. A sudden surge of power could damage sensitive electronic components.
- Do not open the system's top cover. If opening the cover for maintenance is a must, only a trained technician should do so. Integrated circuits on computer boards are sensitive to static electricity. Before handling a board or integrated circuit, touch an unpainted portion of the system unit chassis for a few seconds. This will help to discharge any static electricity on your body.
- Place this equipment on a stable surface when install. A drop or fall could cause injury.
- Please keep this equipment away from humidity.
- Carefully mount the equipment into the rack, in such manner, that it won't be hazardous due to uneven mechanical loading.
- This equipment is to be installed for operation in an environment with maximum ambient temperature below 35°C.
- The openings on the enclosure are for air convection to protect the equipment from overheating. DO NOT COVER THE OPENINGS.
- Never pour any liquid into ventilation openings. This could cause fire or electrical shock.
- Make sure the voltage of the power source is within the specification on the label when connecting the equipment to the power outlet. The current load and output power of loads shall be within the specification.
- This equipment must be connected to reliable grounding before using. Pay special attention to power supplied other than direct connections, e.g. using of power strips.
- Place the power cord out of the way of foot traffic. Do not place anything over the power cord. The power cord must be rated for the

- product, voltage and current marked on the product's electrical ratings label. The voltage and current rating of the cord should be greater than the voltage and current rating marked on the product.
- If the equipment is not used for a long time, disconnect the equipment from mains to avoid being damaged by transient over-voltage.
- Never open the equipment. For safety reasons, only qualified service personnel should open the equipment.
- If one of the following situations arise, the equipment should be checked by service personnel:
  1. The power cord or plug is damaged.
  2. Liquid has penetrated the equipment.
  3. The equipment has been exposed to moisture.
  4. The equipment does not work well or will not work according to its user manual.
  5. The equipment has been dropped and/or damaged.
  6. The equipment has obvious signs of breakage.
  7. Please disconnect this equipment from the AC outlet before cleaning. Do not use liquid or detergent for cleaning. The use of a moisture sheet or cloth is recommended for cleaning.
- Module and drive bays must not be empty! They must have a dummy cover.

Product features and specifications are subject to change without notice.

CAUTION :
RISK OF EXPLOSION IF BATTERY IS REPLACED BY AN INCORRECT TYPE.
DISPOSE OF USED BATTERIES ACCORDING TO THE INSTRUCTIONS.
AFTER PERFORMING ANY INSTALLATION OR SERVICING, MAKE SURE THE ENCLOSURE ARE LOCK AND SCREW IN POSITION, TURN ON THE POWER.

Chapter 1. Prodcut Introduction

1.1 Box Content

Before removing the subsystem from the shipping carton, visually inspect the physical condition of the shipping carton. Exterior damage to the shipping carton may indicate that the contents of the carton are damaged. If any damage is found, do not remove the components; contact the dealer where the subsystem was purchased for further instructions. Before continuing, first unpack the subsystem and verify that the contents of the shipping carton are all there and in good condition.

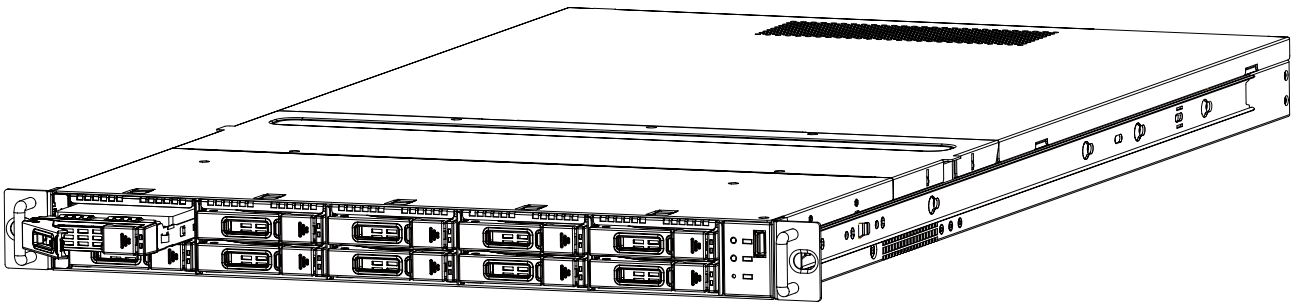

- Enclosure(Power supply, fan, 10 x 2.5" HDD tray included)

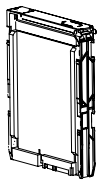

- 2.5'' HDD Tray

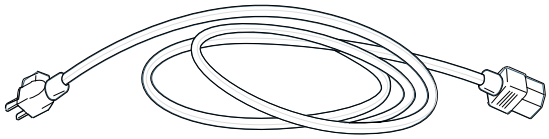

- Power cord

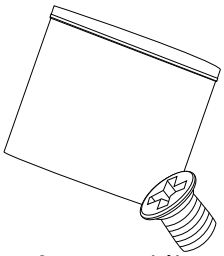

- Screws kit x 1set

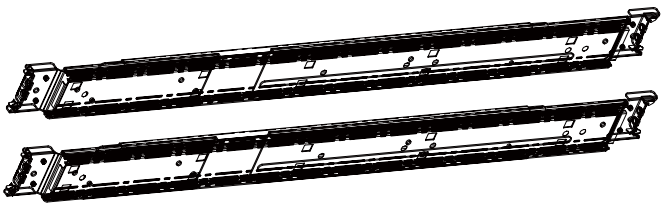

- Slide rail x 1set

♦ PACKAGE CONTENT MAY VARY PER REGION.

1.2 Specifications

Dimensions (W x D x H) (with chassis ears)	mm : 482.6 x 787.4 x 44.4		
	inches : 19 x 31 x 1.75		
Motherboard	AIC Server Board Phoenix		
Processor	Processor Support	Two Intel® Xeon® Processors E5-2600 v3 Product Family	
	QPI Speeds	9.6 GT/s, 8.0 GT/s, 7.2 GT/s	
	Socket Type	Socket R3 (FCLGA2011-3)	
Chipset Support	Intel® C612 Chipset		
System Memory	• 12 DIMM slots across 8 memory channels (4 memory channels per CPU; 2 channels with 2DPC and 2 channels with 1DPC) - 384GB DDR4 2133/1866 RDIMM DRx4 - 96GB DDR4 2133/1866 RDIMM SRx4 - 768GB DDR4 2133/1866 LRDIMM QRx4 - 1536GB DDR4 2133/1866 LRDIMM 3DS 8Rx4		
Front Panel	• Power on/off • System ID • System reset • USB 2.0 Type A connector		
LEDs	• Power • System ID • Alert		
Drive Bays	External	2.5" hot swap PCIe SSD	8
		2.5" hot swap	2
Backplanes	• 4 x 2-port PCIe backplanes with dual SFF-8643 connectors on each • 1 x 2-port 6Gb SAS/SATA backplane with dual SATA connectors		
Expansion Slots	PCIe 3.0	2 x8	

Riser Cards (included)	PSG-RC-AR1U-20-XXX (PSG Code: PE1U03)	1U PCIe Gold-finger to 1 x PCIe x16 + 2 x PCIe x8 (External)	
	PSG-RC-TO1U-28-110 (PSG Code: PEMS02)	PCIe to SFF8643 for front PCIe SSD backplane connection	
System BIOS	BIOS Type	• Insyde UEFI BIOS • SPI (Serial Peripheral Interface) FLASH Interface	
	BIOS Features	• ACPI • PXE • WOL • AC loss recovery • IPMI 2.0 KCS interface • SMBIOS • Serial console redirection	• BIOS Boot Specification • BIOS Recovery Mode • SRIOV • PCIe Hotplug • iSCSI • TPM • PCIe NTB
On-board Devices	SATA	Built-in SATA RAID controller on Intel® C612 Chipset with software RAID support	
	IPMI	Aspeed AST2400 Advanced PCIe Graphics & Remote Management Processor • Baseboard Management Controller • Intelligent Platform Interface 2.0 (IPMI 2.0) • iKVM, Media Redirection, IPMI over LAN, Serial over LAN • SMASH Support	
	Network Controllers	• Intel® 82599ES 10 GbE Controller, dual port, SFP+, PCIe v2.0 (5.0GT/s) • Intel® Ethernet Controller I210-AT, single port GbE controller, PCIe v2.1, 2.5 GT/s, x1 • Intel® Ethernet Network Connection I217-LM, single port GbE, 1 Gbps	
	Graphics	Aspeed AST2400 Advanced PCIe Graphics & Remote Management Processor • PCIe VGA/2D Controller • 1920x1200@60Hz 32bpp	

Rear I/O	LAN	2 x 10 GbE SFP+ 2 x RJ45
	USB	2 x USB 3.0 Type A
	VGA	1 x DB-15
	Serial Port	1 x DB-9
Power Supply	AC 650W 1+1 redundant high-efficiency power supply 80+ • 90-264VAC, 47-63 Hz	
System Cooling	6 x 40x56mm 21500/18000 rpm hot swap fan modules	
System Management	• IPMI 2.0 • KVM over IP • Media redirection • Temperature, fan, voltage, PSU sensor monitor • System temperature • System ID / System fail indicator • Remote power on/off/reset • SEL message alarm through mail • SNMP support • Intel NM	

Environmental Specifications	• Operating temperature : 0° - 35°C • Operating altitude condition : 0 ~ 10K feet • Storage temperature : -20° ~ 60°C • System relative humidity : 5% - 95% (38°C) non-condensing	
Gross Weight	(w/ PSU & Rail)	kgs : 24
		lbs : 53
Packaging Dimensions	(W x D x H)	mm : 590 x 1130 x 273
		inches : 23.2 x 44.5 x 10.7
Mounting	Standard	28" tool-less slide rail

1.3 General Information

SB122-PH is a 1U Storage Server Barebone with Motherboard Phoenix/ 10 x 2.5"HDD hot swap Bays at front and single 12G expander on HDD Backplane which is a high performance Storage Server Barebone.

- Front Panel

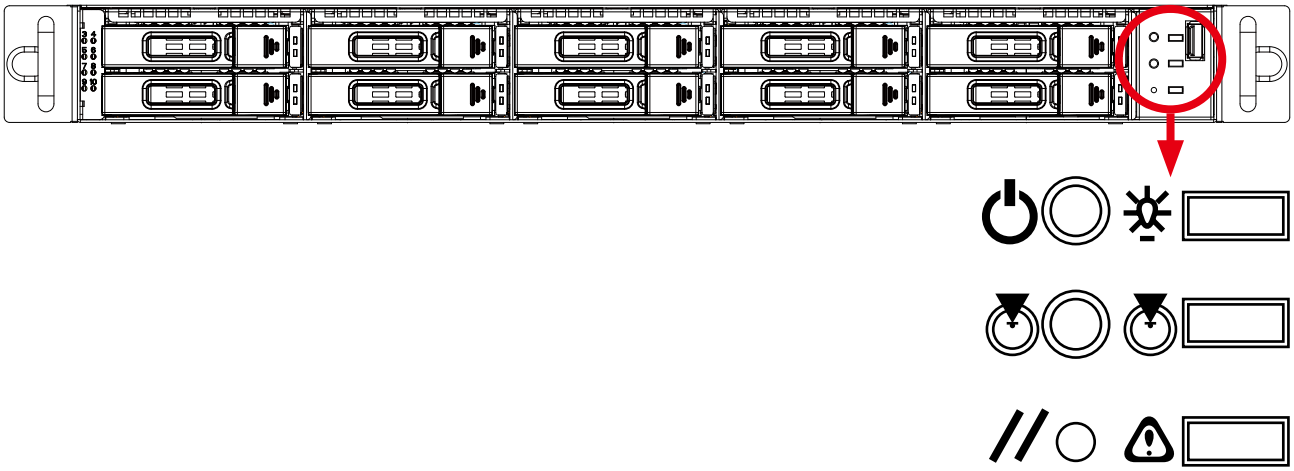

LED	Icon	Color	System Behavior
Power LED		Green	Solid: System On Off: System Off
System ID LED		Blue	System Identification Blink: Activity
Alert LED		Red	Light: System Alert

Controls	Icon	System Behavior
Power ON/OFF		Push for Power On or Off
System ID		Push for turning ID LED On or Off
System Reset	//	Push for System Reset

- Rear Panel

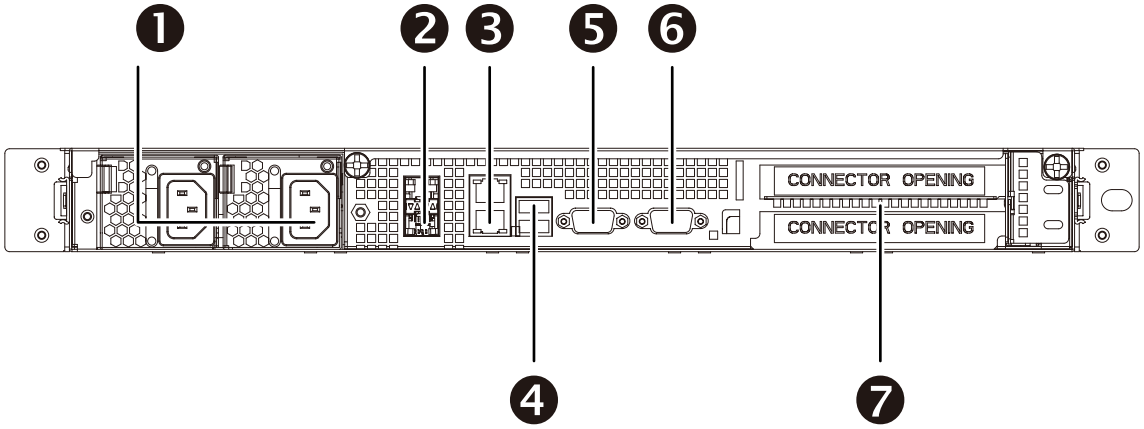

❶AC 650W 1+1 redundant high-efficiency power supply 80+ 90-264VAC, 47-63 Hz
❷2 x SFP+ connectors and cage (for 10 GbE)
❸2 x RJ45 connectors (for GbE and BMC)
❹2 x USB 2.0 Type A connectors
❺DB-15 VGA port
❻DB-9 Serial port
❼PCIe Slots

- Major Components

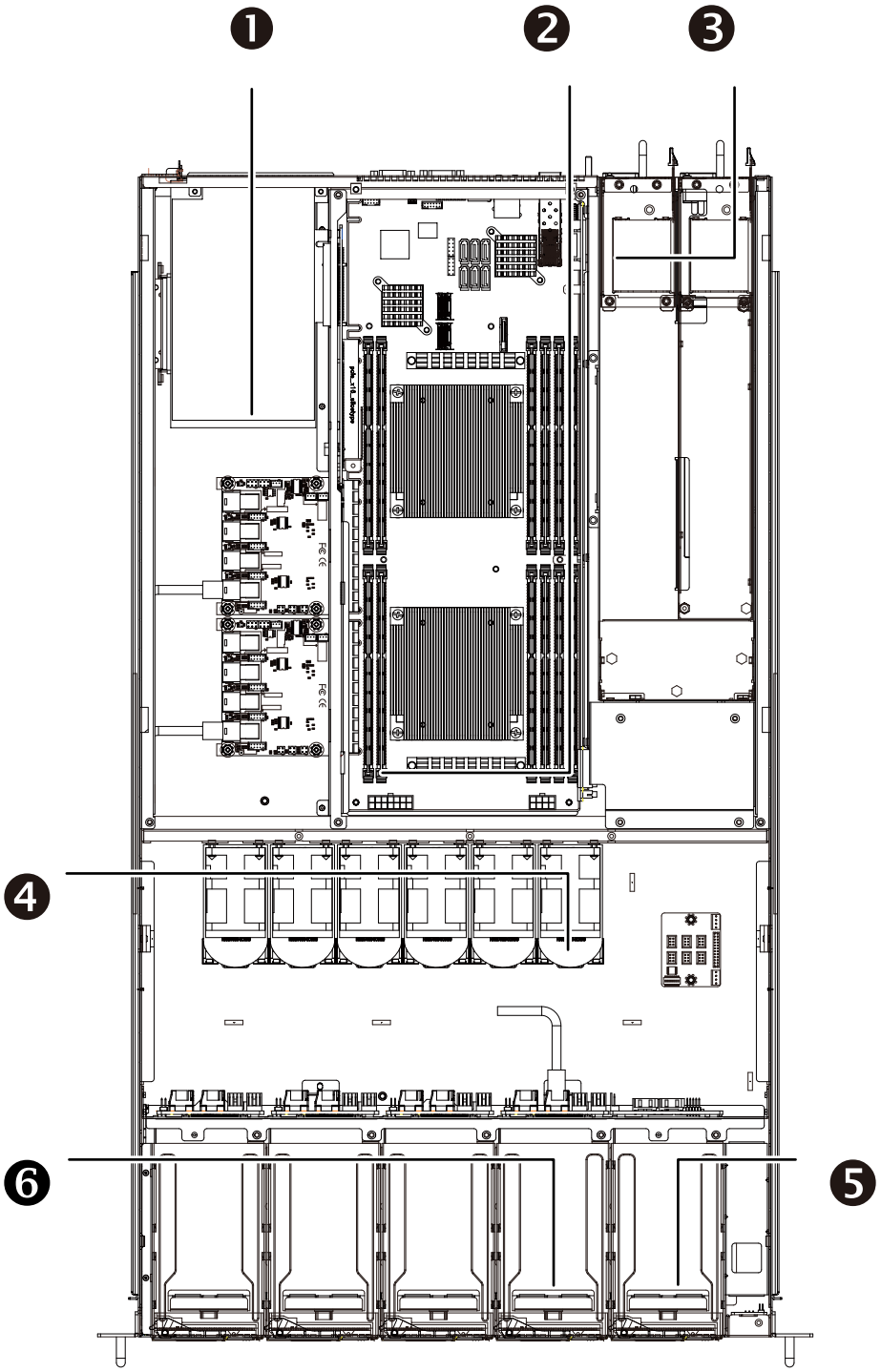

❶ Expansion add-on card
❷ AIC Server Board Phoenix
❸ 650W 1+1 redundant
❹ 6 x 40 x 56mm hot swap fans
❺ External 2.5” hot swap x 2
❻ External 2.5” hot swap PCIe SSD x 8

Chapter 2. Hardware Installation

2.1 Central Processing Unit (CPU)

2.1.1 Removing the Processor Heatsink

The heatsink is attached to the server board or processor socket with captive fasteners. Using a #2 Phillips* screwdriver, loosen the four screws located on the heatsink corners in a diagonal manner using the following procedure:

- Using a #2 Phillips* screwdriver, start with screw 1 and loosen it by giving it two rotations and stop (see letter A).

- Proceed to screw 2 and loosen it by giving it two rotations and stop (see letter B). Similarly, loosen screws 3 and 4. Repeat steps A and B by giving each screw two rotations each time until all screws are loosened.
- Lift the heatsink straight up (see letter C).

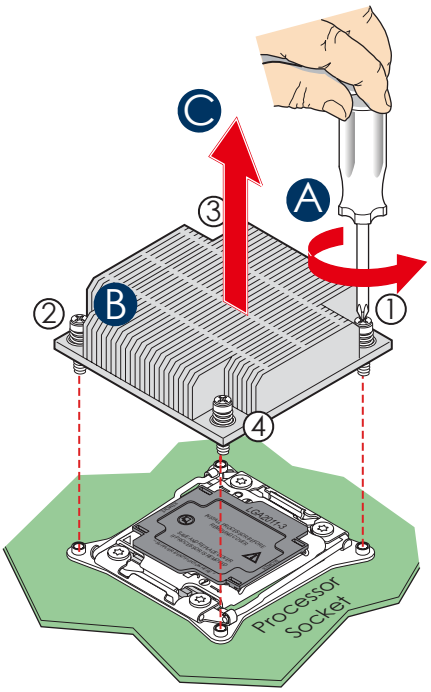

2.1.2 Installing the Processor

CAUTION :
Processor must be appropriate: You may damage the server board if you install a processor that is inappropriate for your server.

CAUTION :
ESD and handling processors: Reduce the risk of electrostatic discharge (ESD) damage to the processor by doing the following:
(1) Touch the metal chassis before touching the processor or server board. Keep part of your body in contact with the metal chassis to dissipate the static charge while handling the processor.
(2) Avoid moving around unnecessarily.

2.1.2.1 Unlatch the CPU Load Plate

- Push the lever handle labeled "OPEN 1st" (see letter A) down and toward the CPU socket. Rotate the lever handle up.
- Repeat the steps for the second lever handle (see letter B).

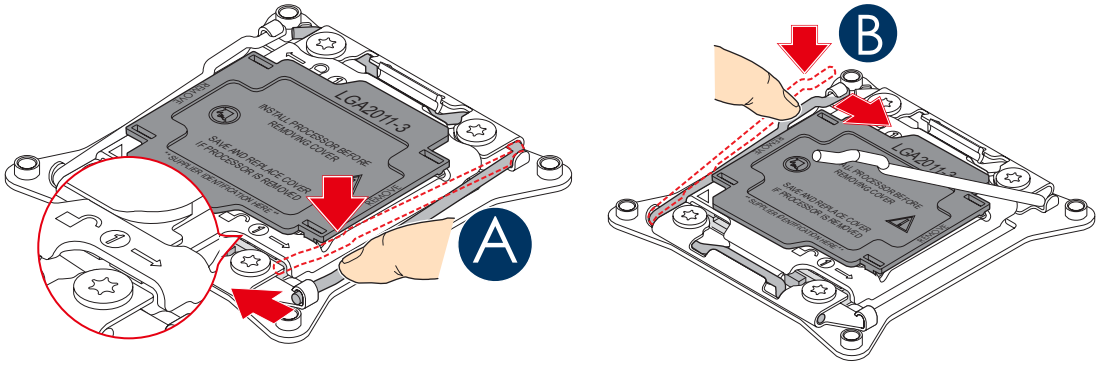

2.1.2.2 Lift open the Load Plate

- Rotate the right lever handle down until it releases the Load Plate (see letter A).
- While holding down the lever handle, with your other hand, lift open the Load Plate (see letter B).

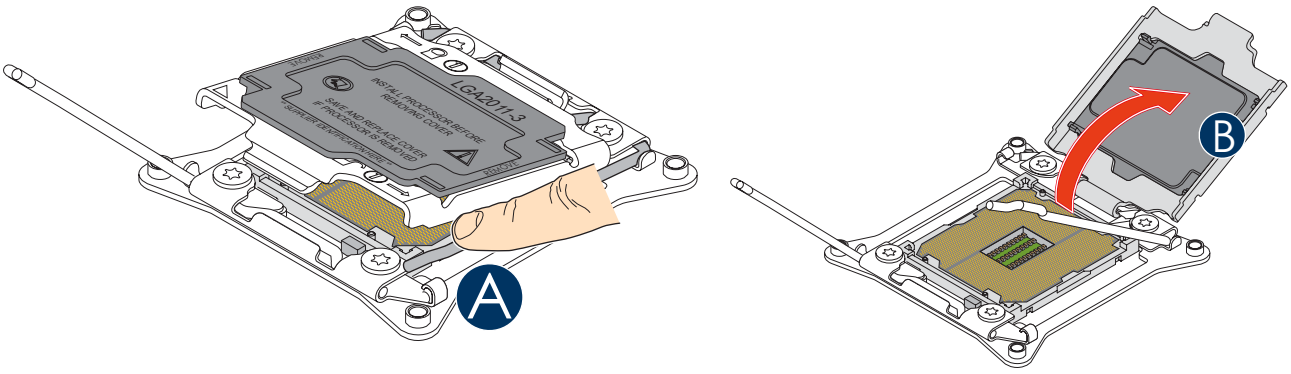

2.1.2.3 Install the Processor

- Remove the processor from its package.
- Carefully remove the protective cover from the bottom side of the CPU, taking care not to touch any CPU contacts (see letter A).
- Orient the processor with the socket so that the processor cutouts match the four orientation posts on the socket (see letter B). Note the location of a gold key at the corner of the processor (see letter C). Carefully place (Do NOT drop) the CPU into the socket.

CAUTION :
THE PINS INSIDE THE CPU SOCKET ARE EXTREMELY SENSITIVE. OTHER THAN THE CPU, NO OBJECT SHOULD MAKE CONTACT WITH THE PINS INSIDE THE CPU SOCKET. A DAMAGED CPU SOCKET PIN MAY RENDER THE SOCKET INOPERABLE, AND WILL PRODUCE ERRONEOUS CPU OR OTHER SYSTEM ERRORS IF USED.

NOTE :
THE UNDERSIDE OF THE PROCESSOR HAS COMPONENTS THAT MAY DAMAGE THE SOCKET PINS IF INSTALLED IMPROPERLY. THE PROCESSOR MUST ALIGN CORRECTLY WITH THE SOCKET OPENING BEFORE INSTALLATION. DO NOT DROP THE PROCESSOR INTO THE SOCKET.

NOTE :
WHEN POSSIBLE, A CPU INSERTION TOOL SHOULD BE USED WHEN INSTALLING THE CPU.

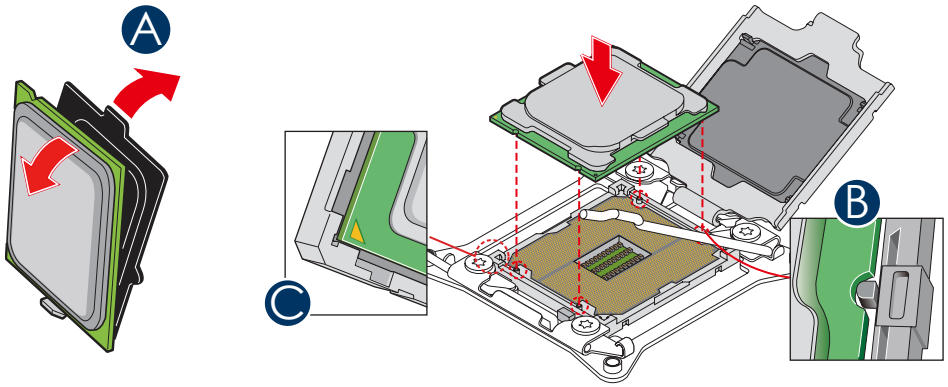

2.1.2.4 Remove the Socket Cover. Remove the socket cover from the load plate by pressing it out.

NOTE :
THE SOCKET COVER SHOULD BE SAVED AND RE-USED SHOULD THE PROCESSOR NEED TO BE REMOVED AT ANYTIME IN THE FUTURE.

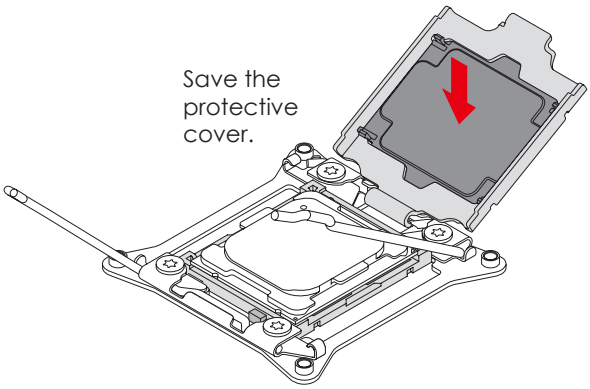

2.1.2.5 Close the Load Plate. Carefully lower the load plate down over the processor.

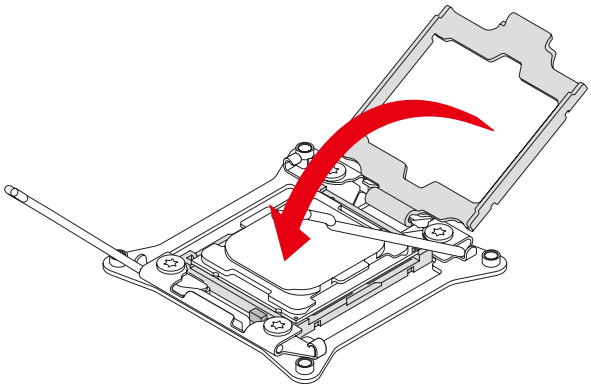

2.1.2.6 Lock down the Load Plate

- Push down on the locking lever on the CLOSE 1st side (see letter A). Slide the tip of the lever under the notch in the load plate (see letter B). Make sure the load plate tab engages under the socket lever when fully closed.
- b.Repeat the steps to latch the locking lever on the other side (see letter C). Latch the levers in the order as shown.

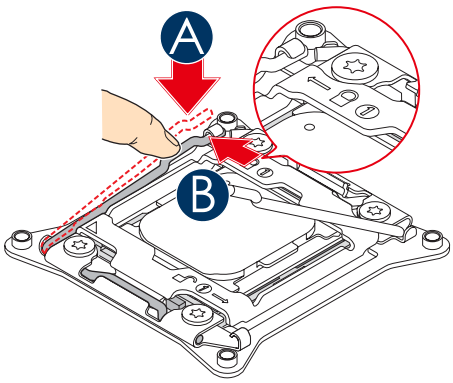

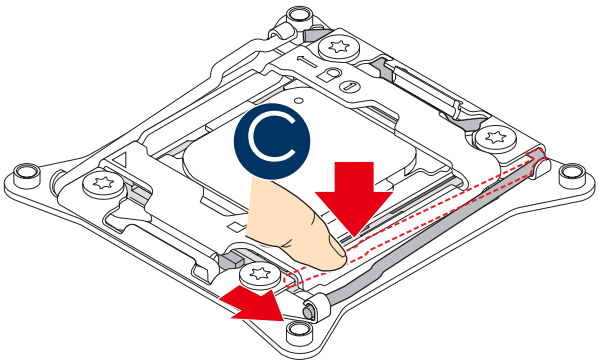

2.1.3 Installing the Processor Heatsink

NOTE :
THE PROCESSOR HEATSINK FOR CPU1 AND CPU2 IS DIFFERENT. FXXCA91X91HS IS FOR CPU1, WHILE FXXEA91X91HS2 IS FOR CPU2. MISLOCATING THE HEATSINK WILL CAUSE SERIOUS THERMAL DAMAGE.

- If present, remove the protective film covering the Thermal Interface Material on the bottom side of the heatsink (see letter A).
- Align the heatsink fins to the front and back of the chassis for correct airflow. The airflow goes from front-to-back of the chassis (see letter B).
- Each heatsink has four captive fasteners and should be tightened in a diagonal manner using the following procedure:
- Using a #2 Phillips* screwdriver, start with screw 1 and engage screw threads by giving it two rotations and stop (see letter C). (Do not fully tighten.)
- Proceed to screw 2 and engage screw threads by giving it two rotations and stop (see letter D). Similarly, engage screws 3 and 4.
- Repeat steps C and D by giving each screw two rotations each time until each screw is lightly tightened up to a maximum of 8 inch-lbs torque (see letter E).

CAUTION:
Do not over-tighten fasteners.

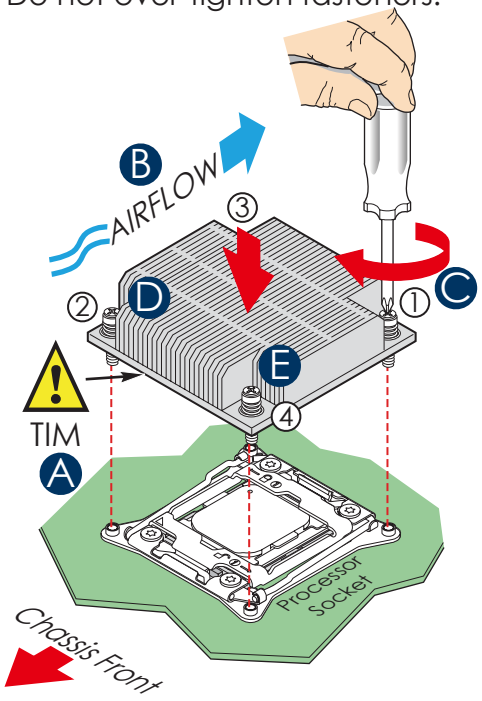

2.1.4 Removing the Processor

NOTE :

- Remove the processor by carefully lifting it out of the socket, taking care not to drop the processor and not touching any pins inside the socket.
- Install the socket cover if a replacement processor is not going to be installed.

2.1.5 Different heatsink for each of its CPUs

Carefully position heatsink over the CPU0 and CPU1, and align the heatsink screws with the screw holes in the motherboard.

CPU0

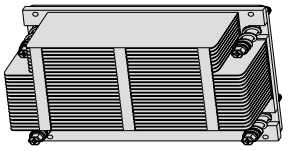

CPU1

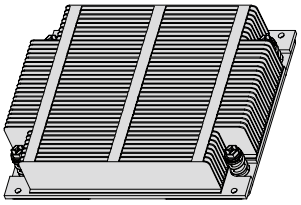

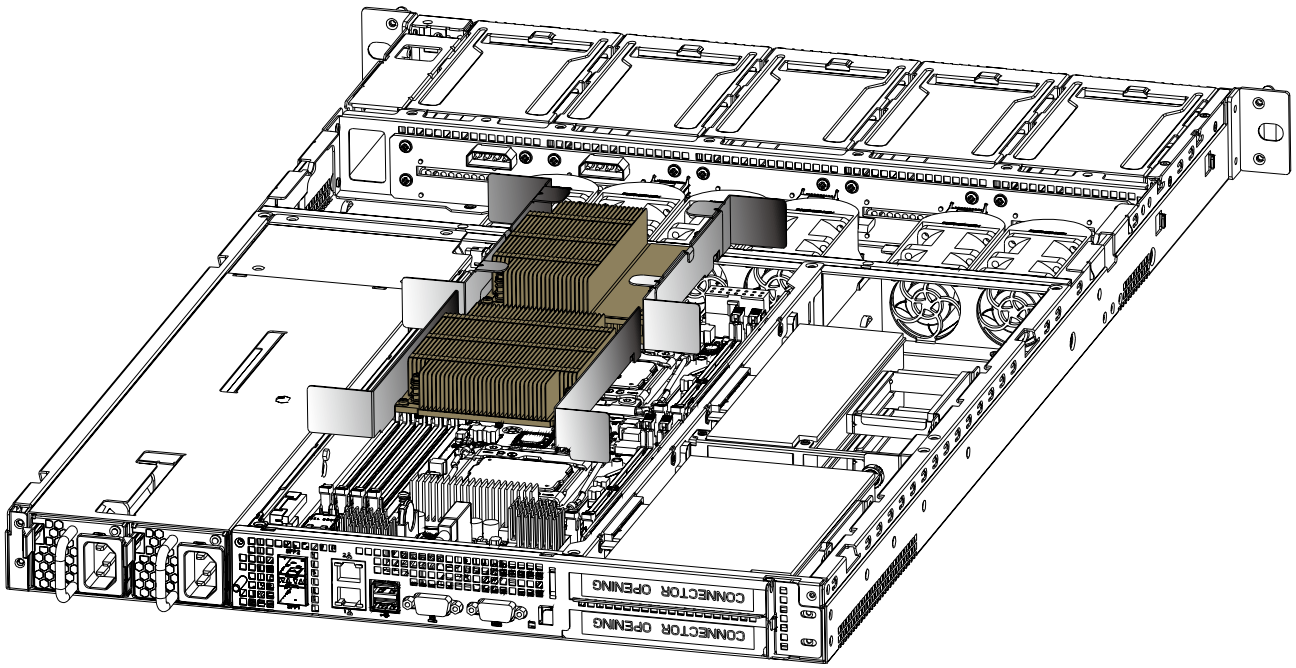

Caution - Possible thermal damage. Avoid moving the heatsink after it has contacted the top of the CPU. Too much movement could disturb the layer of thermal compound, causing voids, and leading to ineffective heat dissipation and component damage.

2.2 System Memory

This server board supports up to twelve DDR4 1333/1600/1866/2133 Registered ECC SDRAM(RDIMM) / Load-Reduced DIMM (LRDIMM).

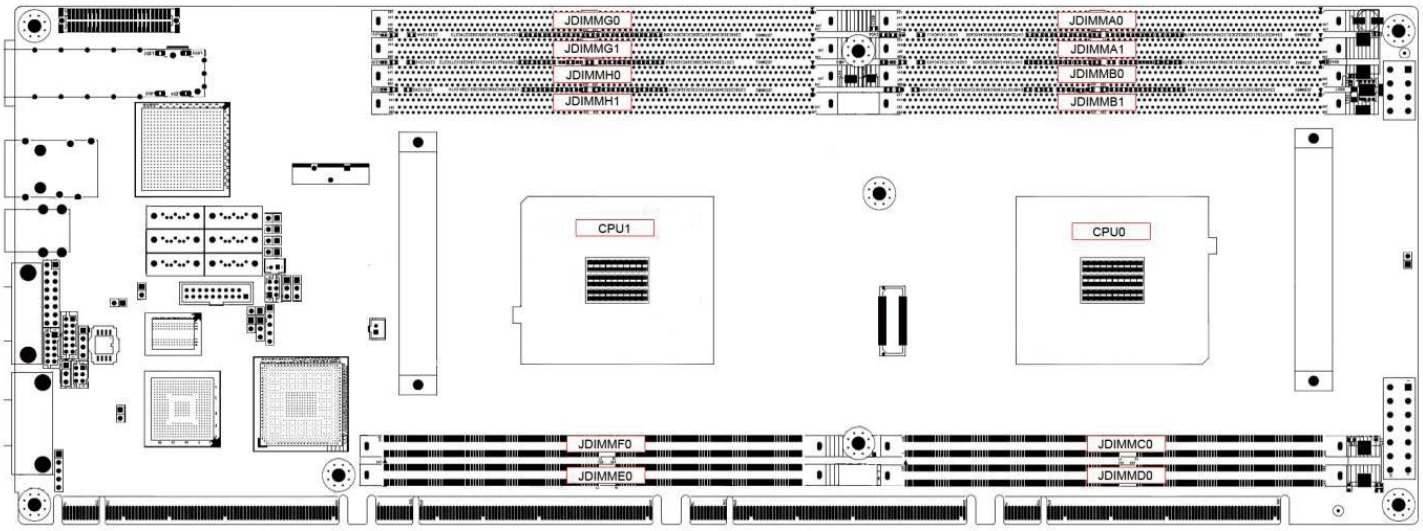

2.2.1 Populate DIMMs in the following order:

DIMM Numbers	DIMM ARRANGMENT	
	CPU1	CPU0
2 DIMMs	JDIMM_G0	JDIMM_A0

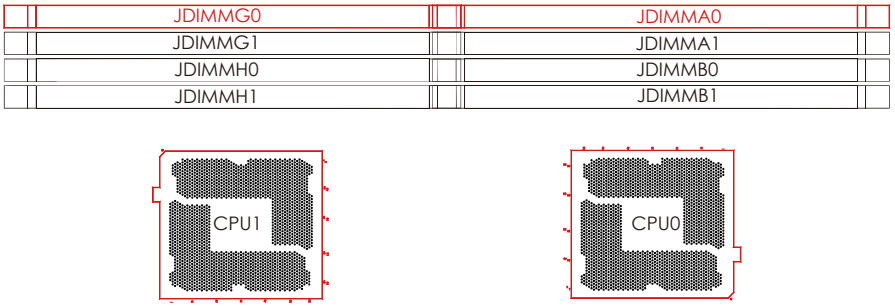

	CPU1	CPU0
4 DIMMs	JDIMM_G0	JDIMM_A0
	JDIMM_H0	JDIMM_B0

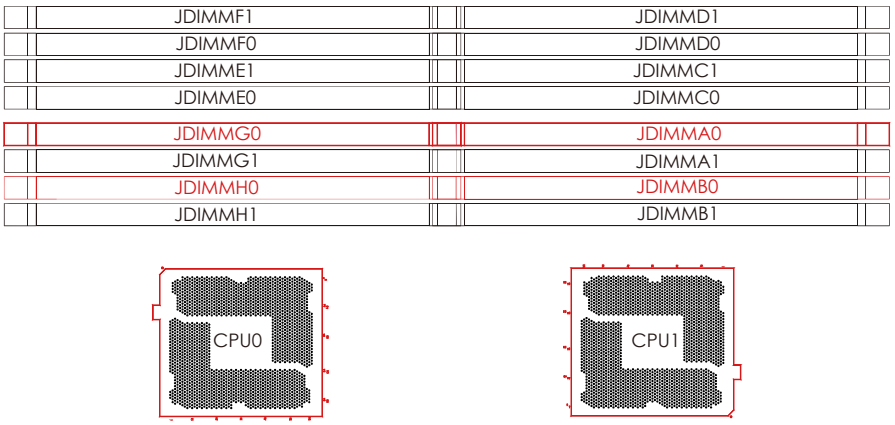

	CPU1	CPU0
6 DIMMs	JDIMM_G0	JDIMM_A0
	JDIMM_H0	JDIMM_B0
	JDIMM_E0	JDIMM_C0

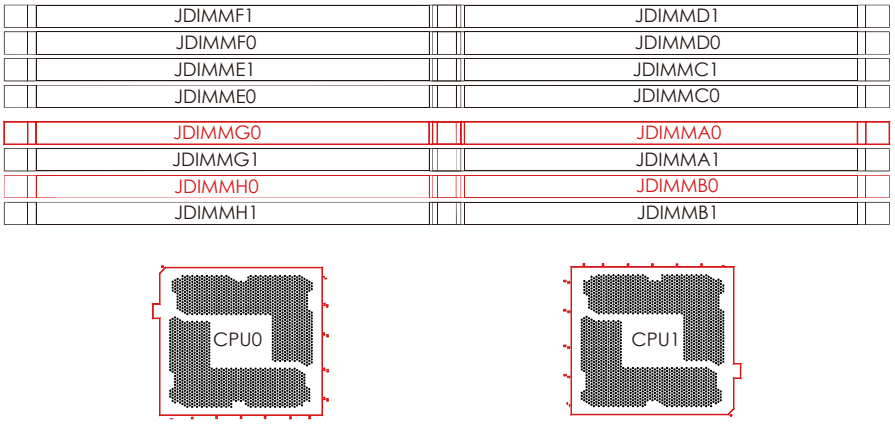

	CPU1	CPU0
8 DIMMs	JDIMM_G0	JDIMM_A0
	JDIMM_H0	JDIMM_B0
	JDIMM_F0	JDIMM_D0
	JDIMM_E0	JDIMM_C0

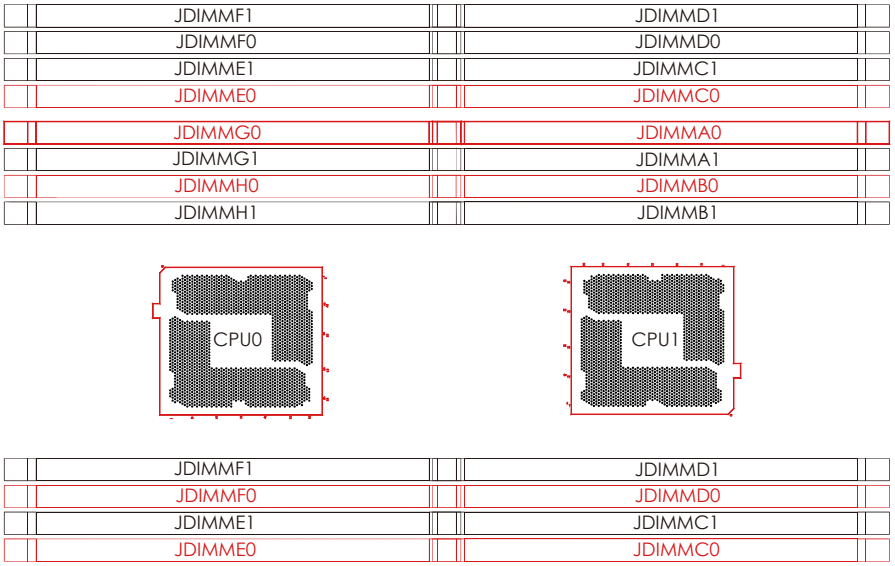

	CPU1	CPU0
10 DIMMs	JDIMM_G0	JDIMM_A0
	JDIMM_G1	JDIMM_A1
	JDIMM_H0	JDIMM_B0
	JDIMM_F0	JDIMM_D0
	JDIMM_E0	JDIMM_C0

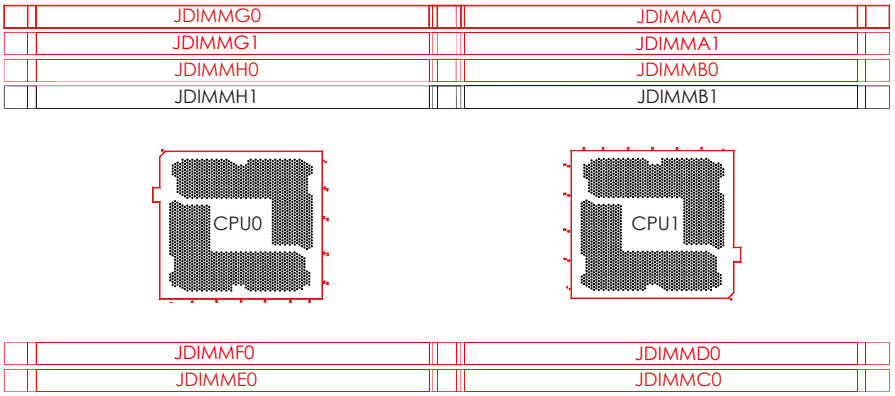

	CPU1	CPU0
12 DIMMs	JDIMM_G0	JDIMM_A0
	JDIMM_G1	JDIMM_A1
	JDIMM_H0	JDIMM_B0
	JDIMM_H1	JDIMM_B1
	JDIMM_F0	JDIMM_D0
	JDIMM_E0	JDIMM_C0

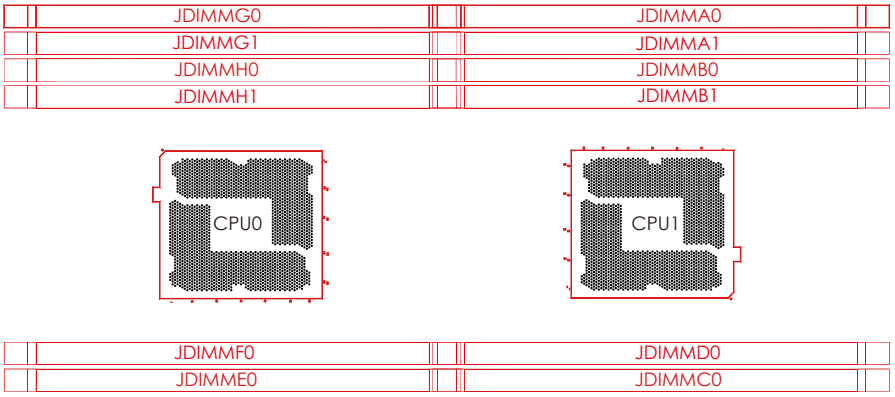

2.2.2 DIMM Installation Procedure

Unlock a DIMM socket by pressing the retaining clips outward.

Insert module vertically and press down until it snaps into place.

> NOTE: DIMM NOTCH AND SOCKET BUMP MUST ALIGN AS SHOWN.

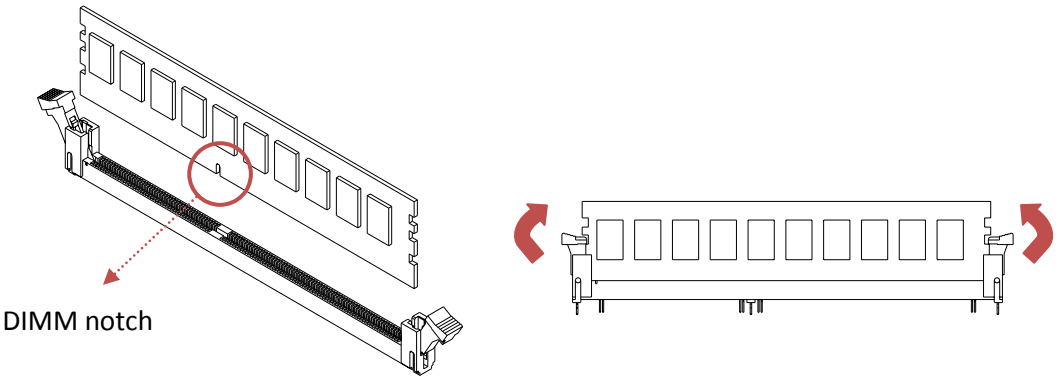

2.3 Removing and Installing Chassis Top Cover

1. Loosen the two thumb screws.
2. Push the top cover backward.

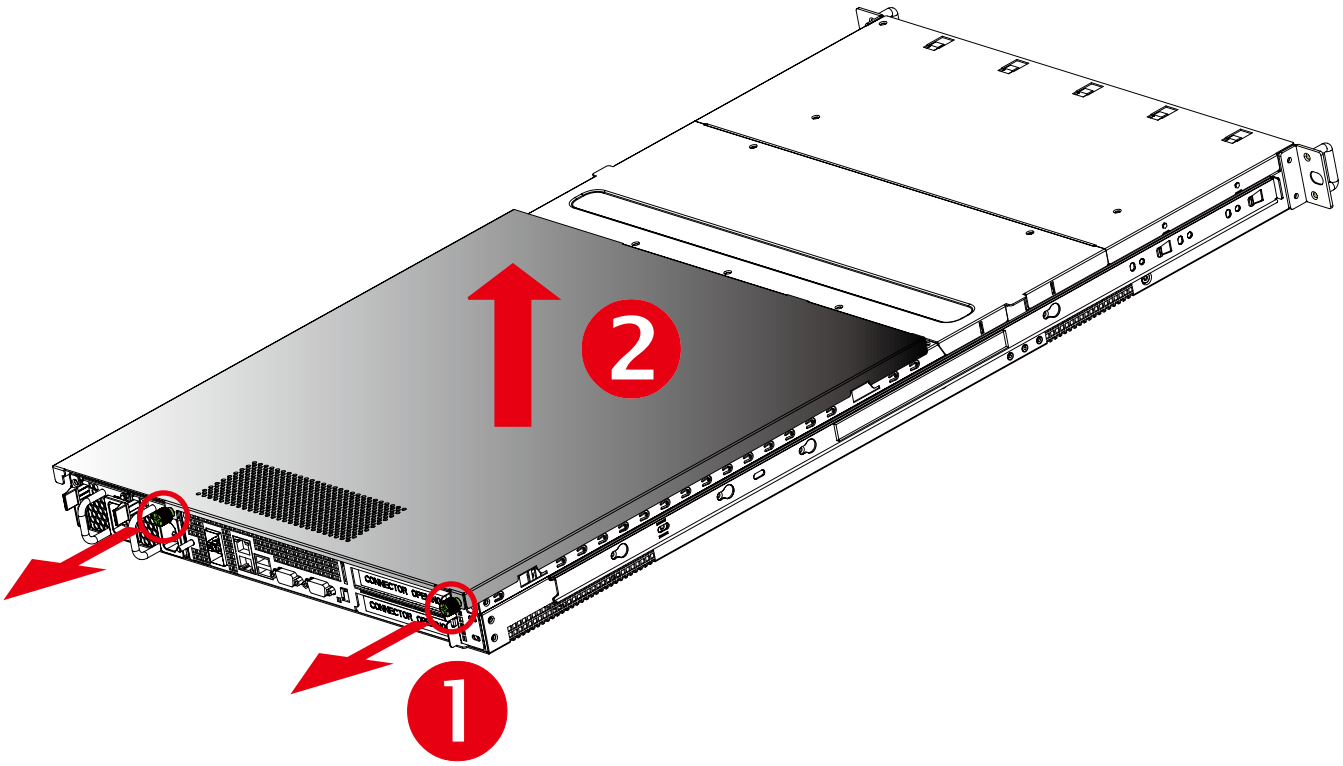

2.4 Removing/Installing a Drive Tray/ Hard Drive/ Drive Slot Map

2.4.1 Removing a Disk Drive

Release a drive tray by pressing the unlock button and pinching the lock lever slightly and pulling out the drive tray.

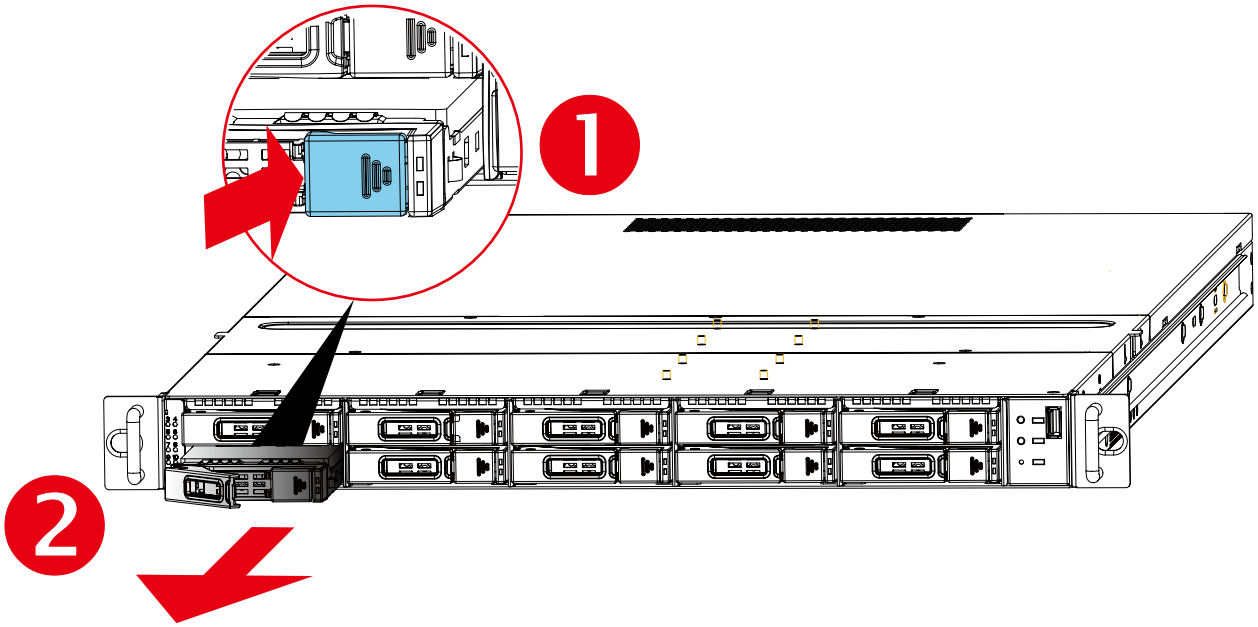

2.4.2 Installing a 2.5" Disk Drive

- Place one 2.5" HDD/SSD on the tray and then secure it with four screws on both sides of HDD tray. The mounting screw holes may vary from different type of HDDs.

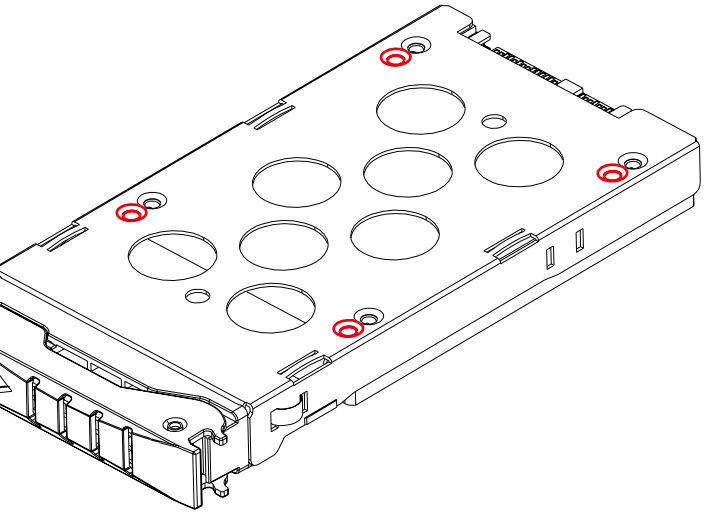

SATA / SAS Drive

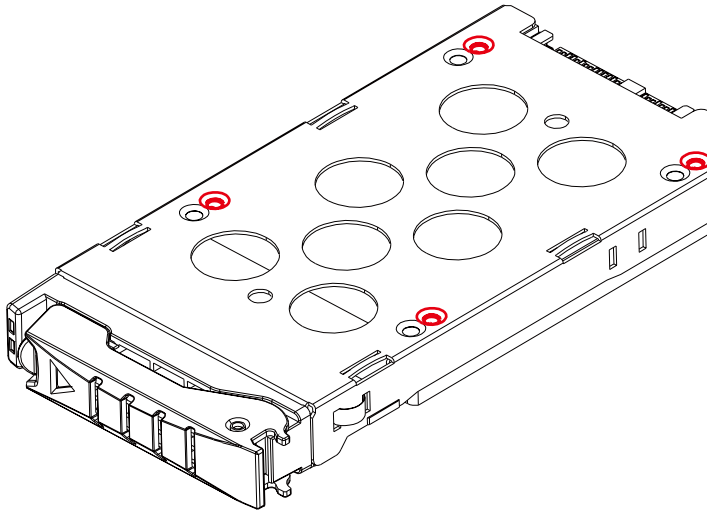

PCIe Drive

2.5 Removing and Installing a Fan Module

CAUTION :
SHUT DOWN THE SYSTEM BEFORE REMOVING THE SYSTEM FANS.

2.5.1 Removing a fan module

1. Follow the direction and move the Fan Housing out of the base.
2. And put the Fan Housing up at one time.

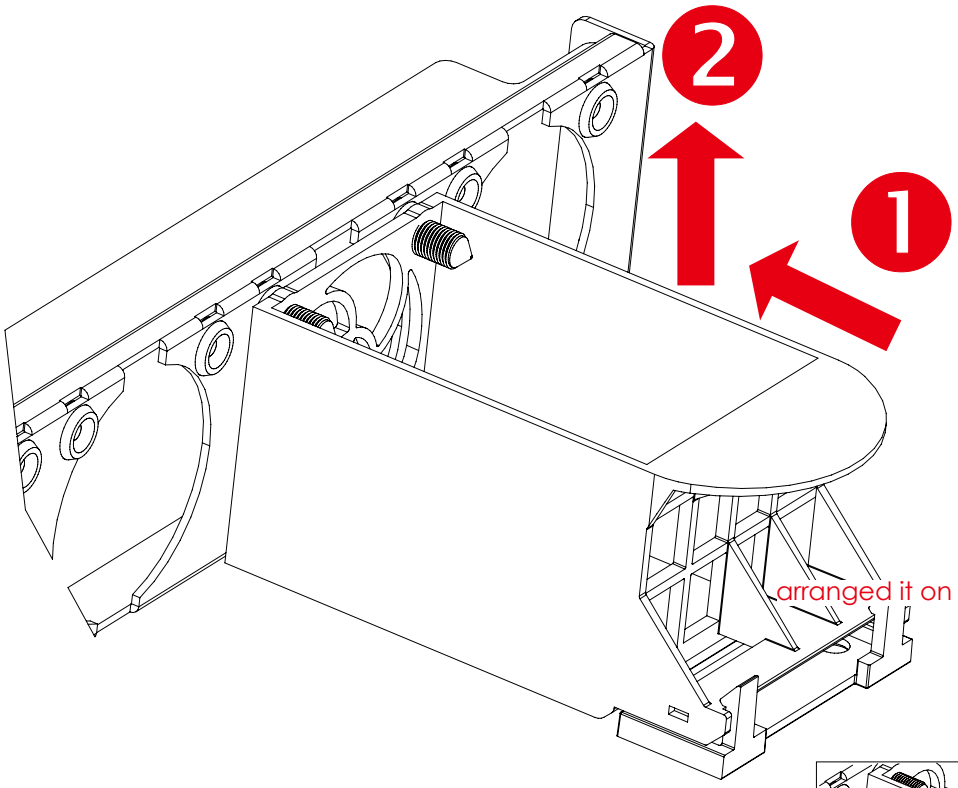

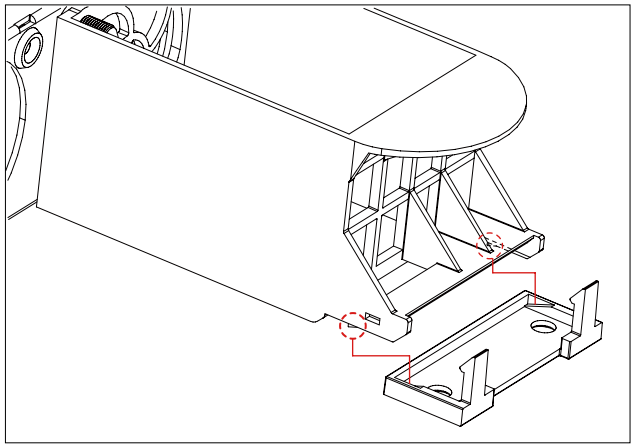

NOTE :
1.PUSH(INSTALL) THE FAN HOUSING DOWN ON THE BASE MUST SIMULTANEOUSLY.
2. MAKE SURE THE FAN HOUSING HAS BUCKLED UP IN BASE SHOWN AS RED MARK.

2.5.2 Installing a fan module

1. Follow the direction and Put the ping (on Fan Housing like the Circle mark) into FAN BAR as shown.
2. And prepare to put the Fan Housing down on the base.

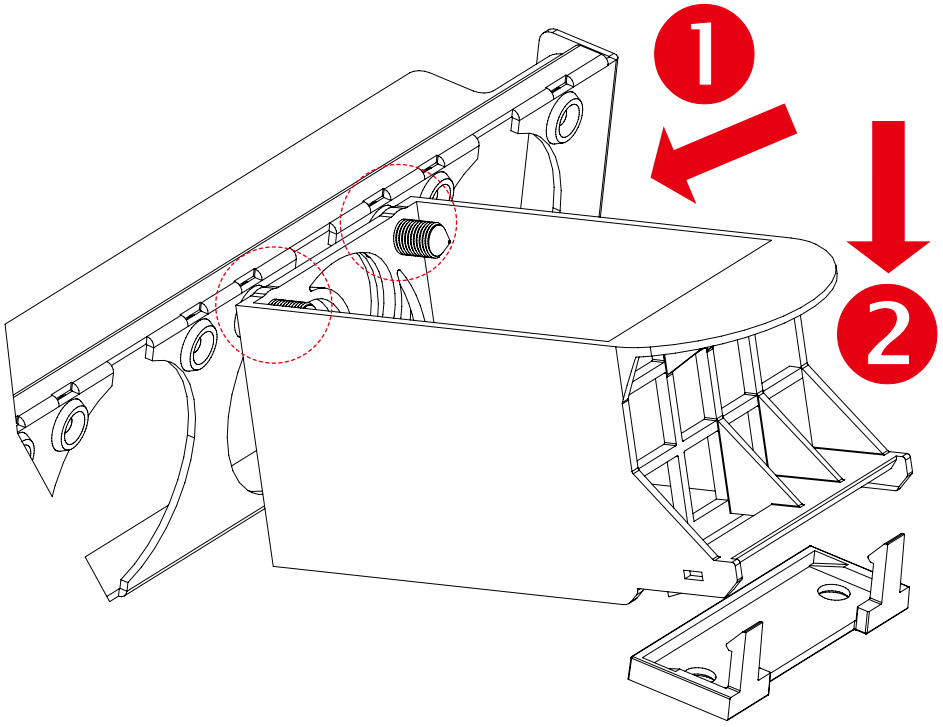

3. Push down the Fan Housing, and arranged it on base.

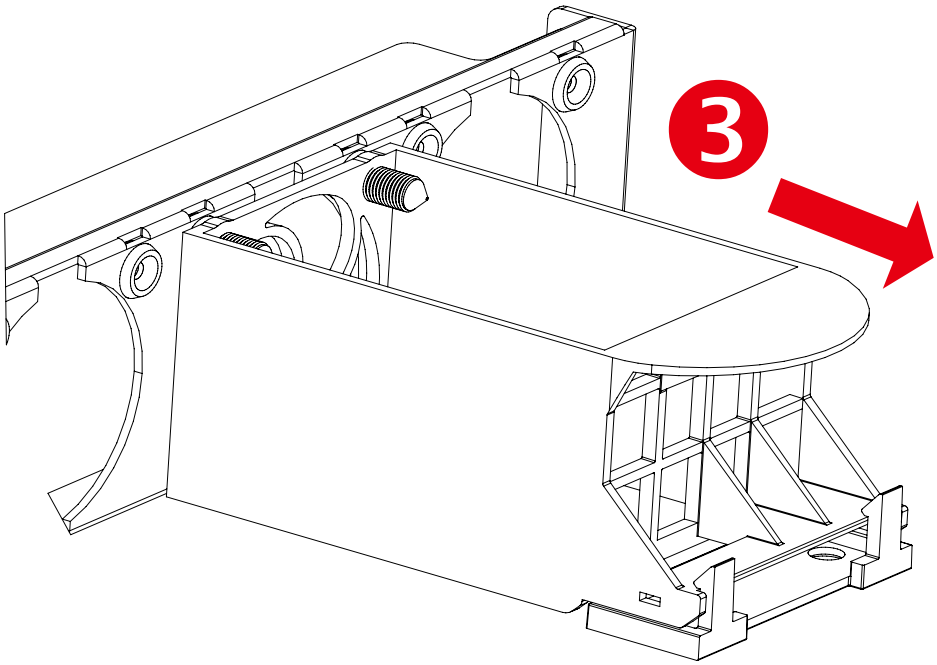

2.6 Removing and Installing a PSU Module

2.6.1 Removing a PSU module

- Removing power cable
- Pushing the latch
- Hold the tray handle
- Pull the PSU module tray handle out gently to slides out the PSU module.

2.6.2 Installing a PSU Module

- To install PSU module, follow the reverse order.

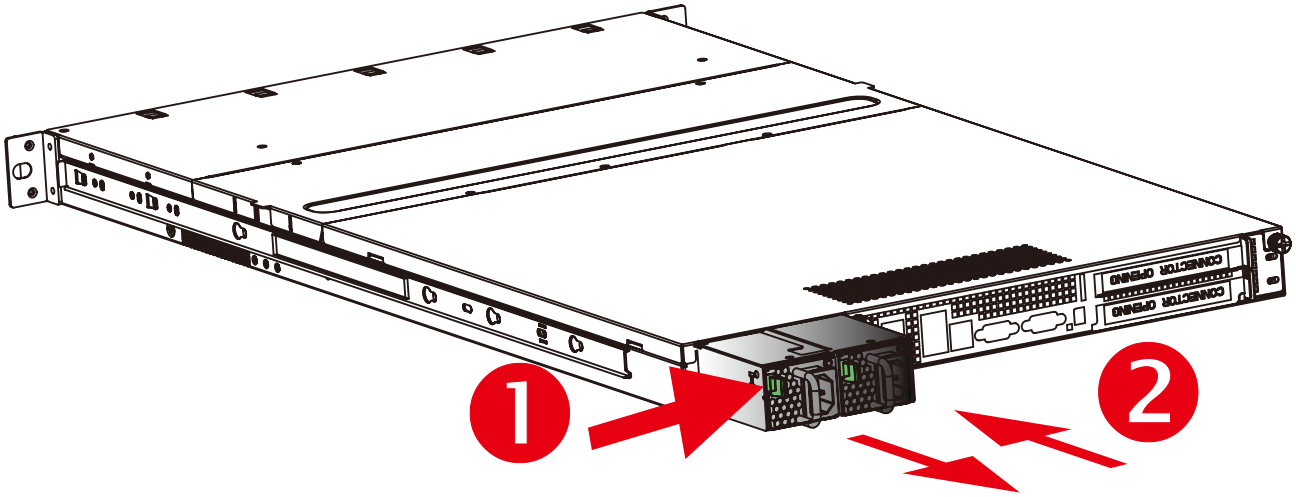

2.7 Replacing the PCIe Card and Riser Assembly

2.7.1 Installing a riser card

1. Unfasten the two screws securing the bracket to the chassis.
2. Unfasten the two screws securing the card retainer to the chassis.

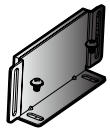

Card Retainer

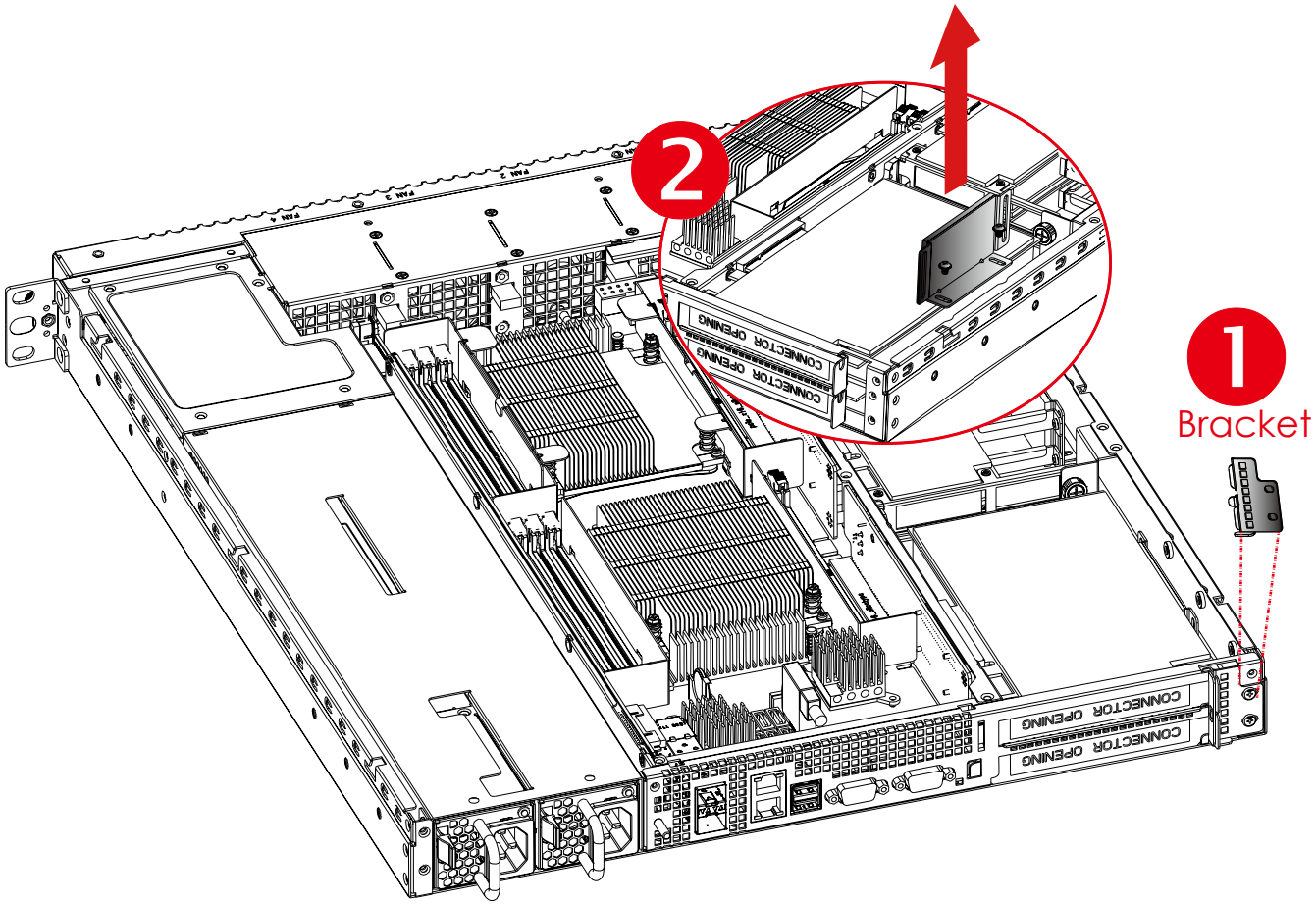

3. Disconnect the card from the Riser Card Assembly. Pull the PCIe Card rightward and out of the chassis.

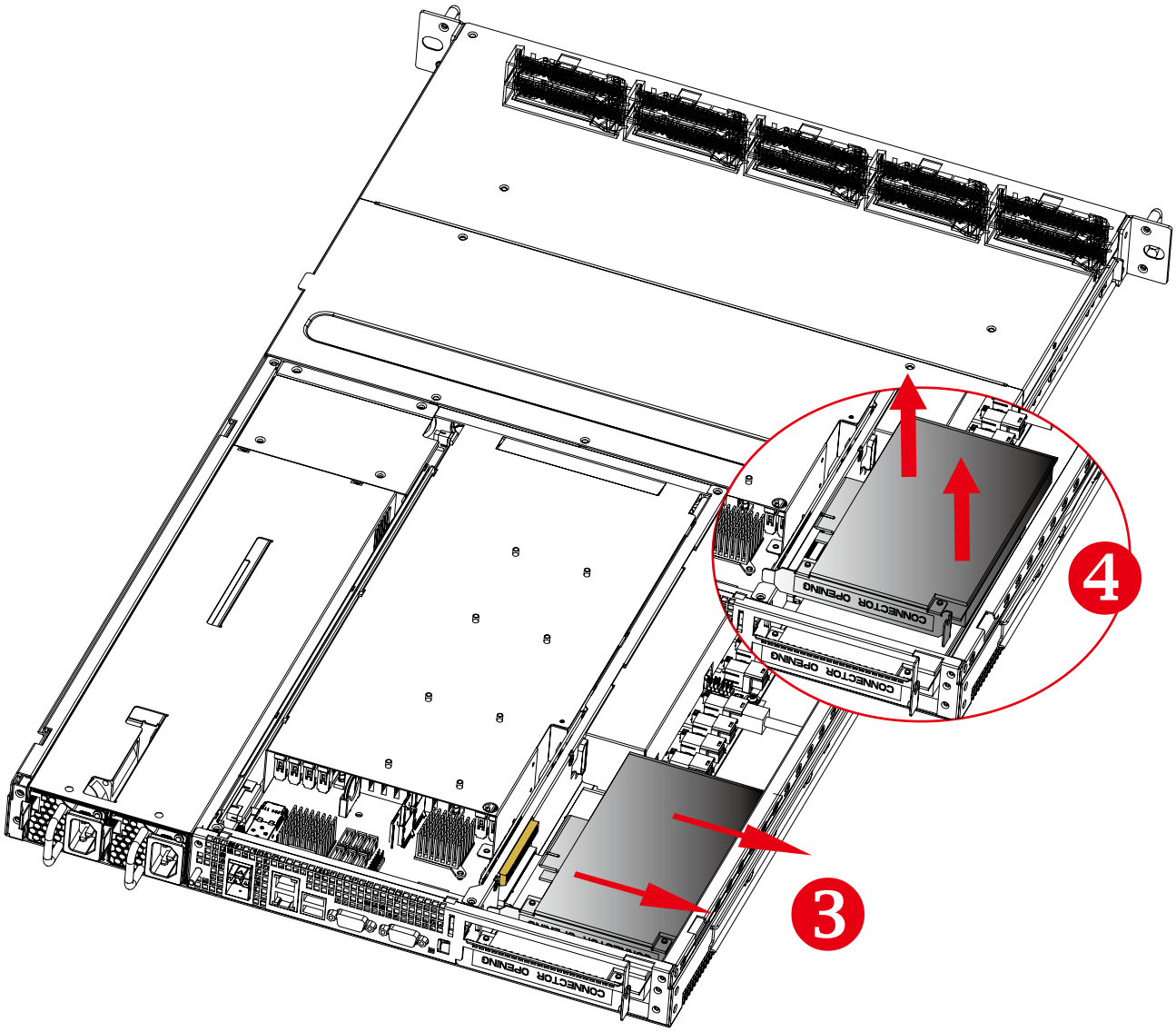

2.8 Tool-less Blade Slide Installation introduction

1. Pull on the ‘’Front-Release’’to unlock the inner channel from the Slide Assembly.

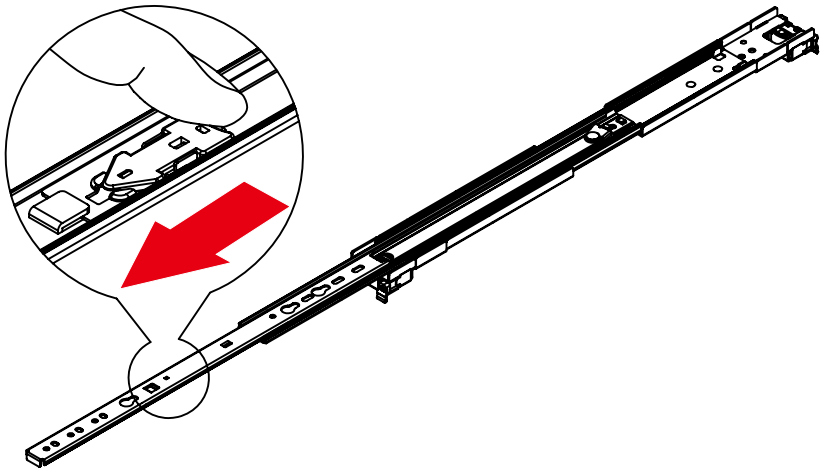

2. Release the Detent-Lock and push Middle Channel inwards to retract Middle Channel.

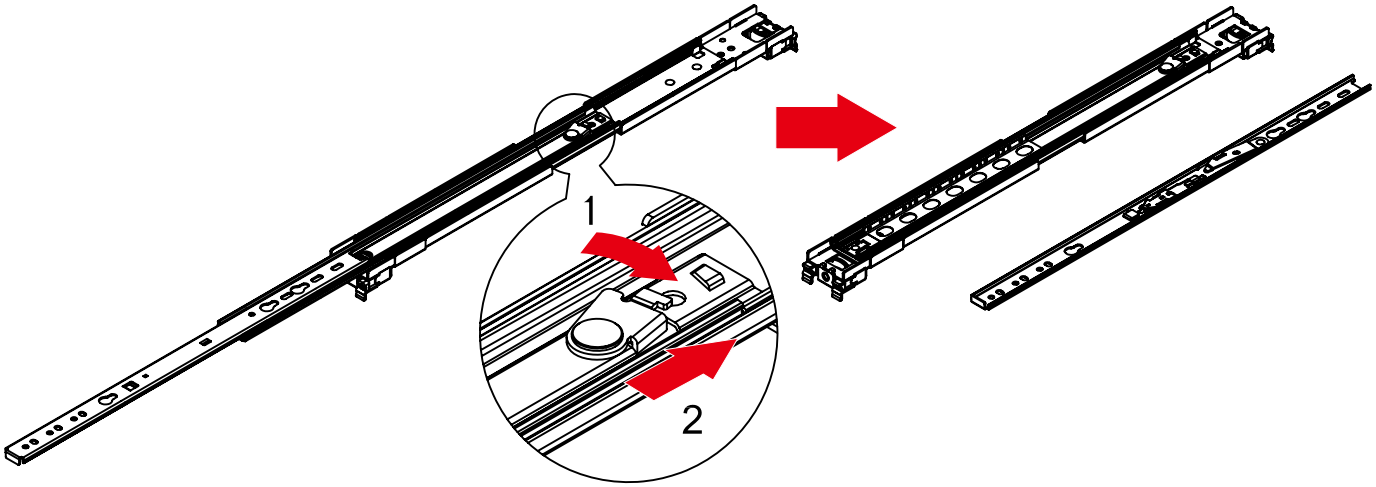

Optional:
Remove Metal Spacer for Aluminium Racks

Metal Spacer

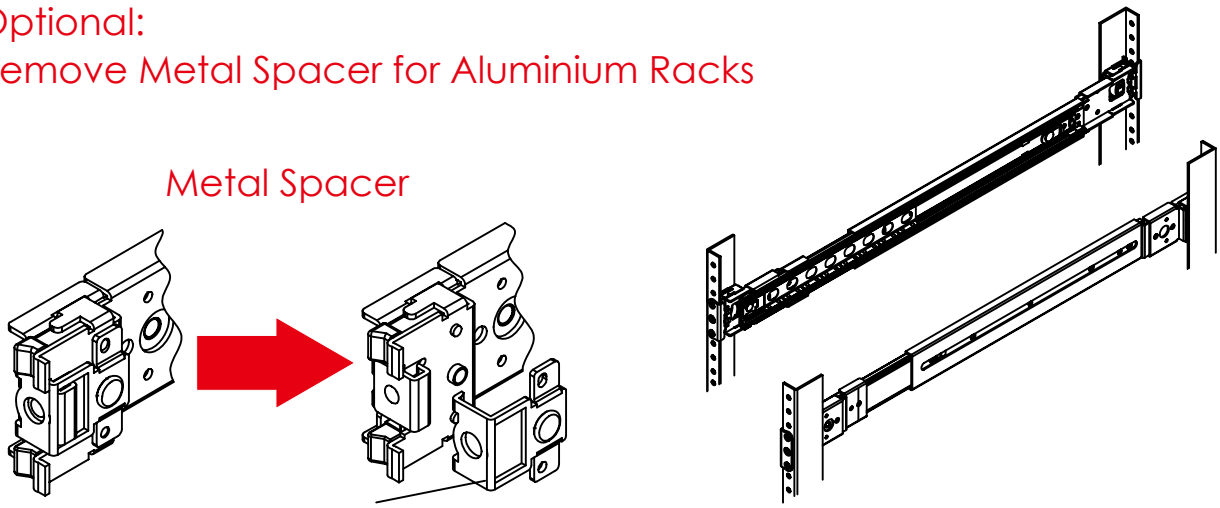

3. Aligning the Front Bracket with the Mounting Hole.

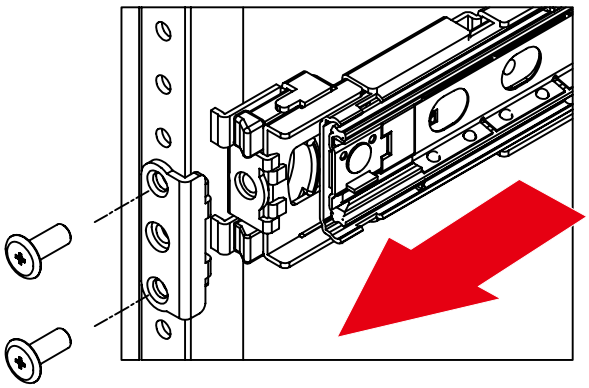

4. Push in to assembly the Front Bracket onto the Rack.

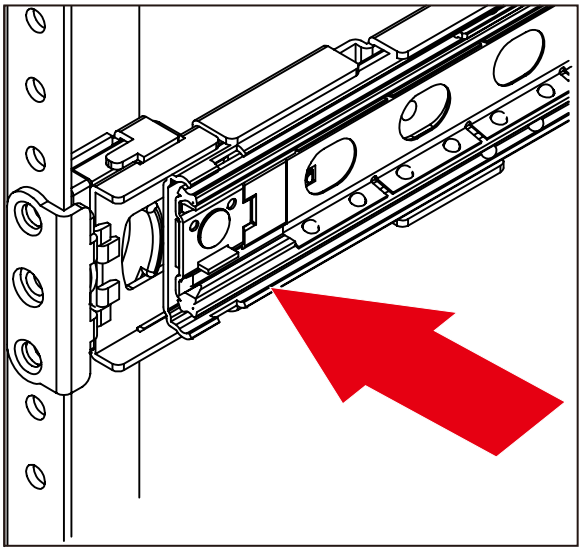

5. Now the bracket is fixed onto the Rack.
   (Optional M6x10L screws are to secure the rails with posts if needed.)

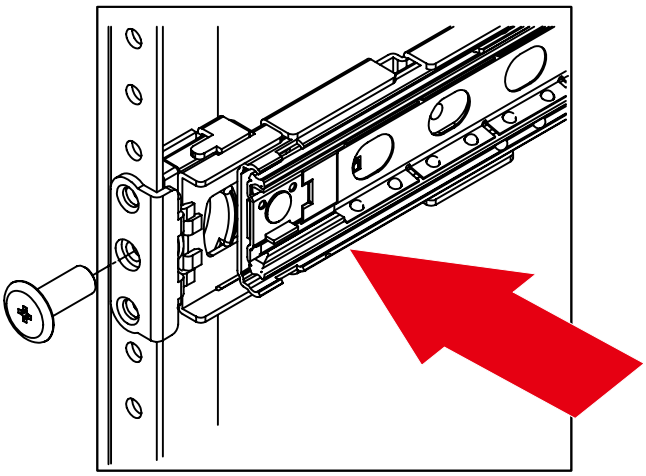

6. Refer to Diagram 3. & 4. to assemble the End Bracket onto the Rack.

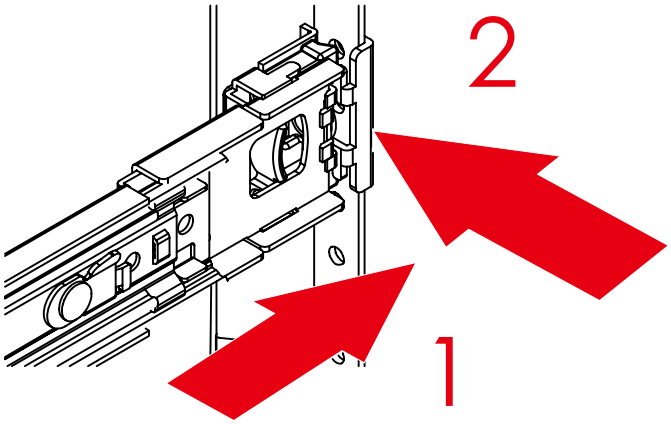

7. Assemble the inner channel onto the chassis using thescrews provided.

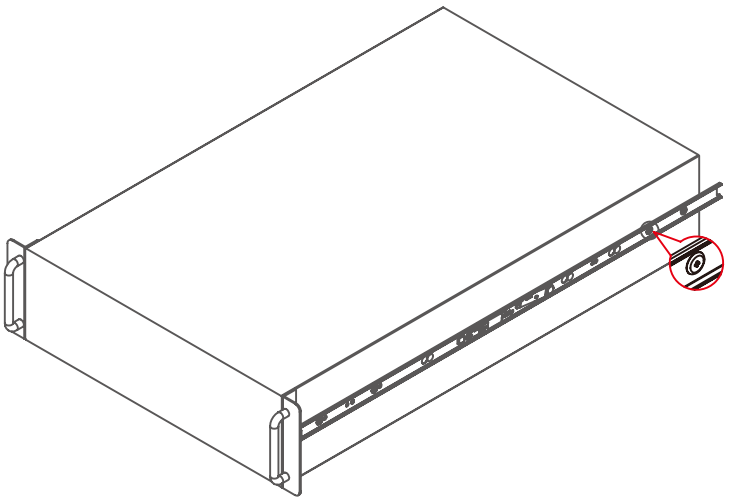

8. Push the chassis with inner channels into Slide to complete Rack Installation.

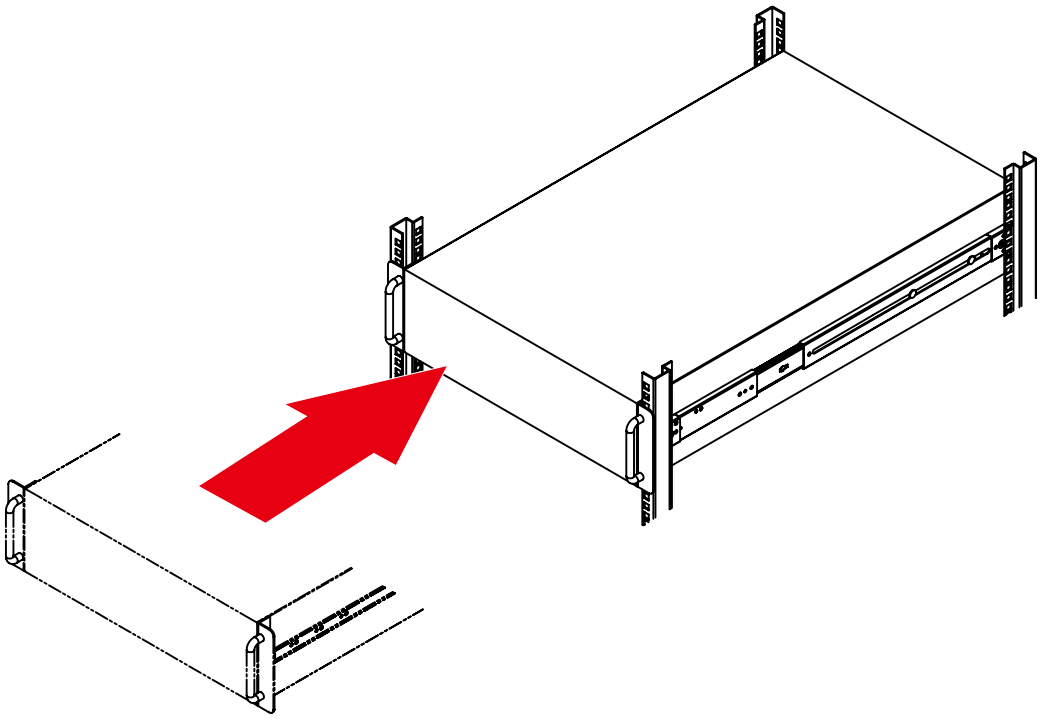

Chapter 3. Motherboard Settings

This section describes the jumpers, internal connectors, and internal LEDs setting on Libra motherboard. Motherboard layout and important jumper settings are listed as below.

3.1 Motherboard block diagram

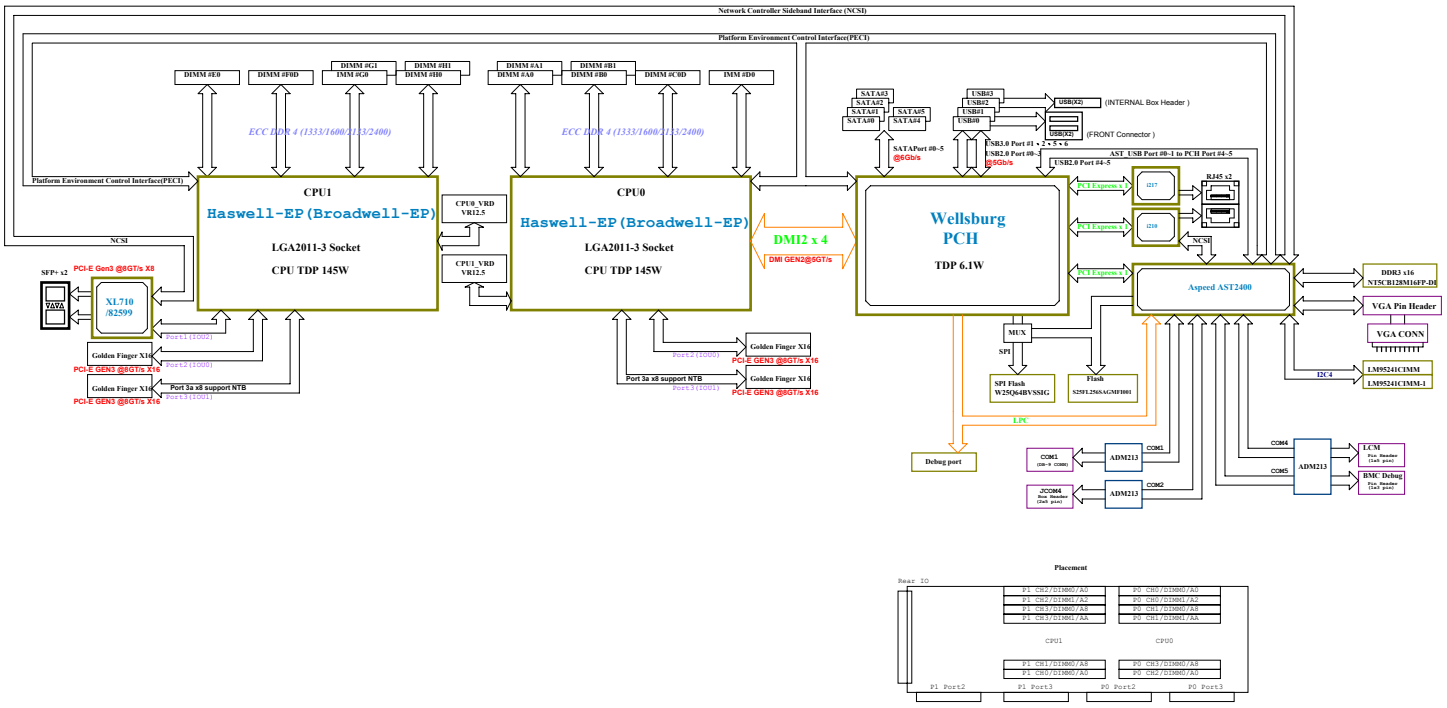

3.2 Motherboard block diagram

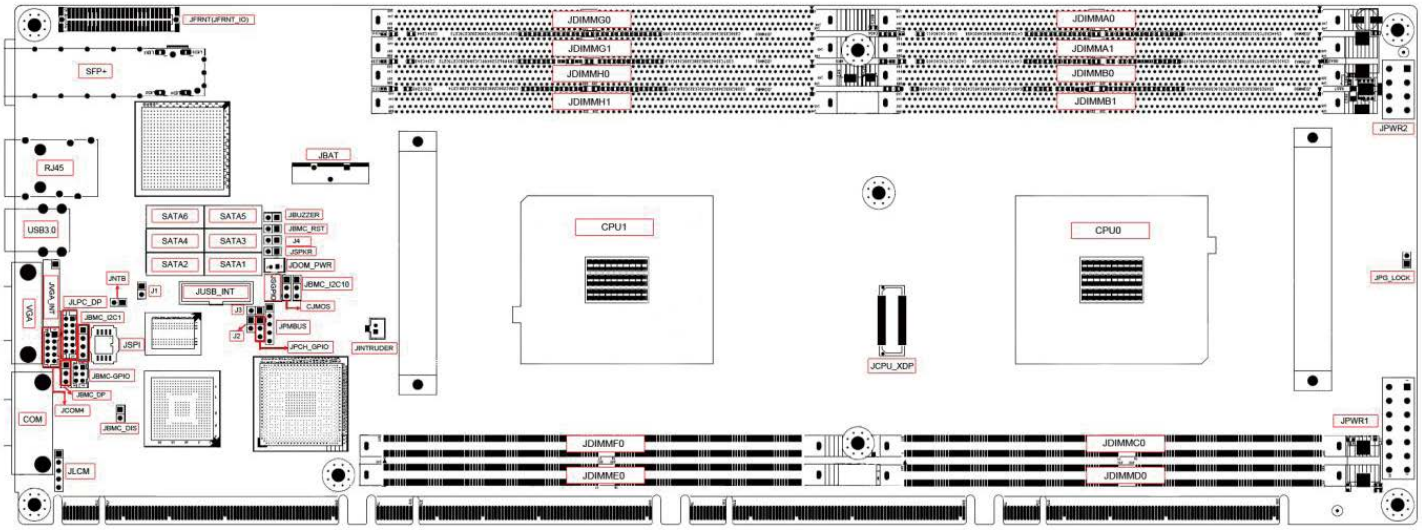

3.3 Motherboard Content List

Connectors		Location	Connectors		Location
1	SFP+ Port (Dual Port)	SFP+	21	BMC_I2C10	JBMC_I2C10
2	Ethernet (Dual Port)	RJ45	22	BMC IPMI	JBMC_I2C1
3	USB Port (Dual Port)	USB3.0	23	Battery Socket	JBAT
4	COM Port	COM	24	Intruder	JINTRUDER
5	VGA Port	VGA	25	PMBUS	JPMBUS
6	Power Supply (2x7 pin)	JPWR1	26	SPI ROM Socket	JSPI
7	Power Supply (2x4 pin)	JPWR2	27	Speaker	JSPKR
8	SATA-DOM Power	JDOM_PWR	28	BMC Reset	JBMC_RST
9	Front IO	JFRNT/JFRNT_IO	29	BMC Disable	JBMC_DIS
10	Serial ATA (1~6)	SATA1~ SATA6	30	System PG Lock	JPG_LOCK
11	VGA Pin header	JVGA_INT	31	BMC Buzzer	JBUZZER
12	COM Port	JCOM4	32	BIOS Recovery Mode	J3
13	Front USB	JUSB_INT	33	ME Force Recovery Mode	J1
14	Intel® Debug Port	JCPU_XDP	34	Flash Descriptor Security override	J4
15	CPU Sockets	CPU0/CPU1	35	No Reboot(Watch Dog)	J2
16	Debug port	JLPC_DP	36	NTB (Non-Transparent Bridge)	JNTB
17	BMC debug Port	JBMC_DP	37	PCH GPIO	JPCH_GPIO
18	BMC GPIO	JBMC_GPIO	38	LCM(COM Port)	JLCM
19	SGPIO	JSGPIO	39		
20	Clear CMOS	JCMOS	40		

3.4 Internal Connectors/Jumpers

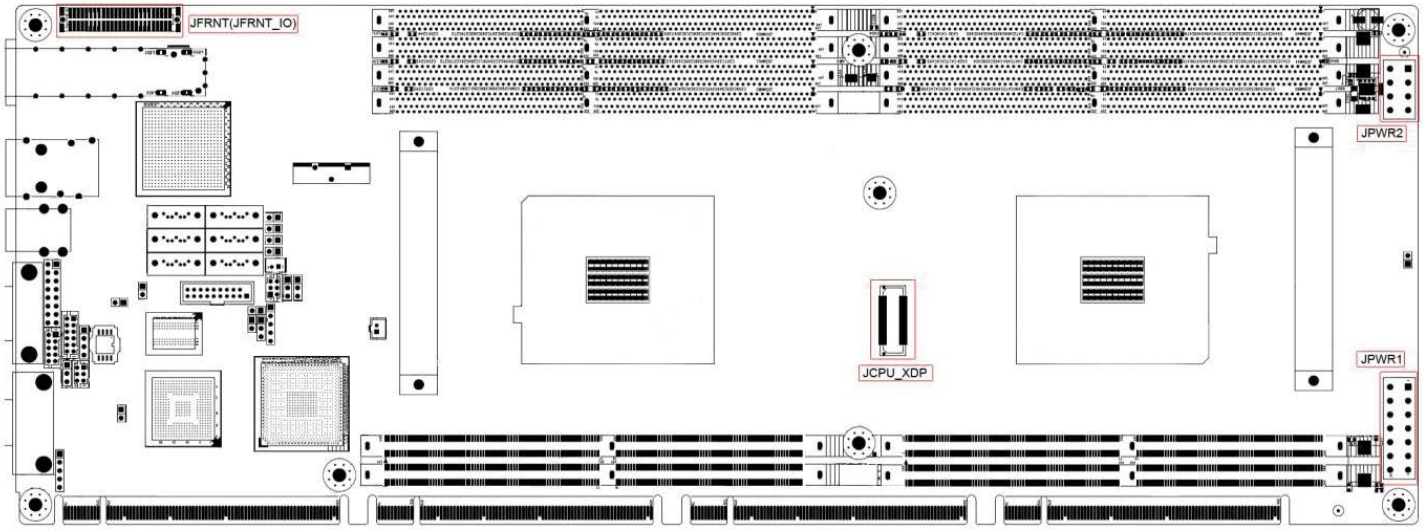

Connectors/Jumpers		Description	
JFRNT (JFRNT_IO)	Front IO	A1. GND	B1.SW_PWR_BTN#
		A2. GND	B2.SW_RST_BTN#
		A3. GND	B3. FP_NMI_BTN
		A4. GND	B4. UID_SW_IN_N
		A5. UIDLED_OUT#	B5. +3.3V_DUAL
		A6. HD_LED	B6. +3.3V
		A7. SYS_HEALTH#	B7. STD_LED
		A8. GND	B8. PWR_LED
		A9. LAN1_TRAFFIC	B9. +3.3V
		A10. LAN2 TRAFFIC	B10. +3.3V
		A11. LAN3 TRAFFIC	B11. +3.3V_DUAL
		A12. LAN4 TRAFFIC	B12. +3.3V_DUAL
		A13. PWM5	B13. PWM1
		A14. PWM6	B14. PWM2
		A15. FAN9_TACH	B15. PWM3
		A16. FAN10_TACH	B16. PWM4
		A17. FAN11_TACH	B17. FAN1_TACH
		A18. FAN12_TACH	B18. FAN2_TACH
		A19. GND	B19. FAN3_TACH
		A20. I2C5SCL	B20. FAN4_TACH
		A21. I2C5SDA	B21. FAN5_TACH
		A22. PSU_SMBCLK_SUS	B22. FAN6_TACH
		A23. PSU_SMBDAT_SUS	B23. FAN7_TACH
		A24. I2C8SCL	B24. FAN8_TACH
		A25. I2C8SDA	B25. +5V_AUX

JPWR1	Power Supply	1.GND	8. +12V
		2. GND	9. +12V
		3. GND	10. +12V
		4. GND	11. +12V
		5. GND	12. +12V
		6. GND	13. +5V_AUX
		7. PS_ON#	14. POWER OK

JPWR2	Power Supply	1.GND	5. +12V
		2. GND	6. +12V
		3. GND	7. +12V
		4. GND	8. +12V

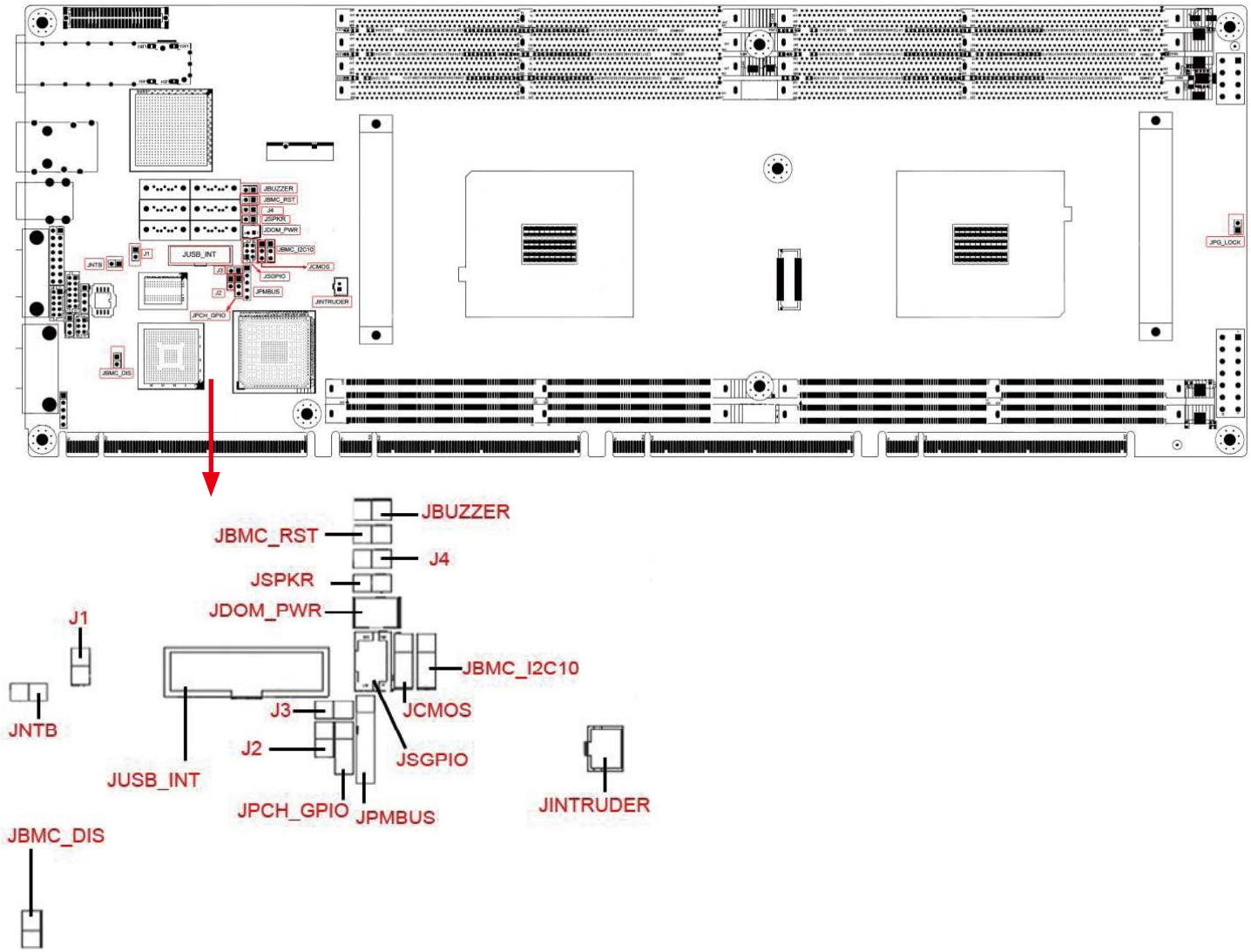

JPG_LOCK	System PG Lock (Jumper)	Open/Normal (Default) Short/Lock

J1	**ME Force Recovery Mode(Jumper)**	**Open/Normal (Default)** Short/ME Recovery Mode

J2	Watch dog(Jumper)	Open/Disable (Default) Short/Enable

J3	BIOS Recovery Mode (Jumper)	Open/Normal (Default) Short/BIOS Recovery Mode

J4	Flash Descriptor Security override	Open/Normal (Default) Short/Flash Security override

JNTB	NTB Configurations (Jumper)	Open/Upstream port(Default)
		Short/Downstream port

JBMC_RST	BMC Reset Setting (Jumper)	Open/Normal (Default)
		Short/Reset BMC

JBMC_DIS	BMC ARM Setting (Jumper)	Open/Normal (Default)
		Short/Disable

JCMOS	CMOS Jump Setting (Jumper)	1. P3V3_VBAT	Pin1-2 close/Normal(Default)
		2. RST_RTCRST_N	Pin2-3 close/Clear CMOS
		3. GND	

JSGPIO	JSGPIO	1. GND	4. PCH_SLOAD
		2. PCH_SDATAOUT0	5. +3.3V
		3. PCH_SDATAOUT1	6. PCH_SCLOCK

JUSB_INT	Front I/O USB Header	1. +5V_USB23	11. PCH_FP_USB2_P3
		2. PCH_FP_USB3_RX_N2	12. PCH_FP_USB2_N3
		3. PCH_FP_USB3_RX_P2	13. GND
		4. GND	14. PCH_FP_USB3_TX_P3
		5. PCH_FP_USB3_TX_N2	15. PCH_FP_USB3_TX_N3
		6. PCH_FP_USB3_TX_P2	16.GND
		7. GND	17. PCH_FP_USB3_RX_P3
		8. PCH_FP_USB2_N2	18. PCH_FP_USB3_RX_N3
		9. PCH_FP_USB2_P2	19. +5V_USB23
		10. PCH_USB_OC#23	20. NC

JBUZZER	BMC Buzzer	1.+5V	2. BMC BUZZER

JPMBUS	PMBUS	1. SMB_PMBUS_CLK	4. GND
		2. SMB_PMBUS_DATA	5. +3.3V
		3. PMBUS_ALERT_N	

JBMC_I2C10	BMC_I2C10	1. I2C10SCL	3. GND
		2. I2C10DAL	

JPCH_GPIO	PCH GPIO	1. PCH_GPIO8	3. GND
		2. PCH_GPIO21	

JSPKR	Speaker	1.+5V	2.PCH_SPKR_M

JDOM_PWR	SATA-DOM Power	1.+5V	2.GND

JINTRUDER	Intruder	OFF/Enable(Default)
		Short/Case Open

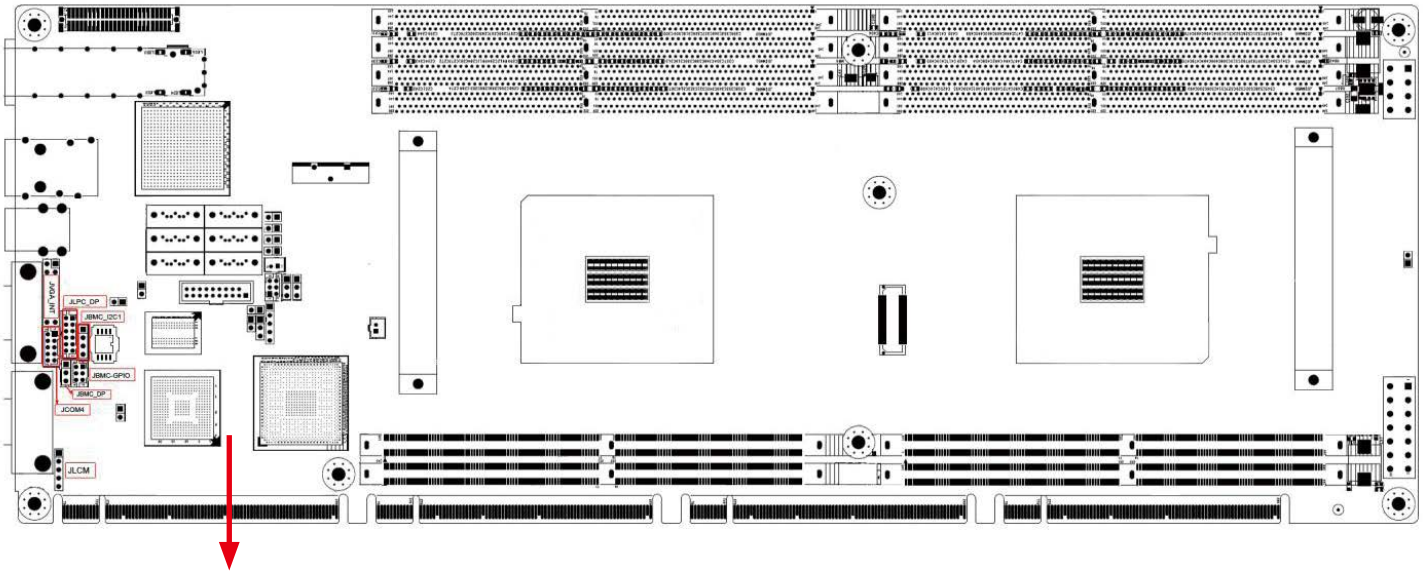

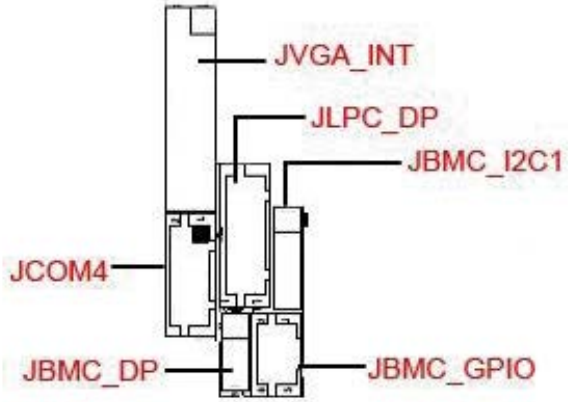

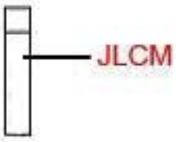

JVGA_INT	VGA	1. GND	2. DACROA
		3. DACGOA	4. NC
		5. DDC_DATAO	6. GND
		7. GND	8. DACBOA
		9. NC	10. AHSYNCO
		11. AVSYNCO	12. DVO_5V
		13. GND	14. GND
		15. GND	16. DDC_CLKO

JLPC_DP	Debug Port	1.GND	2. CLK_33M_DP80
		3. PCH_GPIO61	4. PCH_LFRAME_N
		5. AST_SERIRQ	6. RST_PLTRST_N
		7. PCH_LPC_LAD2	8. PCH_LPC_LAD3
		9. PCH_LPC_LAD1	10.+3.3V
		11.GND	12. PCH_LPC_LAD0

JBMC_GPIO	BMC GPIO	1.GND	4. BMC_GPY1
		3. I2C9SDA	5. I2C9SCL
		2. BMC_GPY2	6. BMC_GPY0

JBMC_DP	BMC debug Port	1.SCOM2_T3OUT	3.GND
		2.SCOM2_R4IN	

JCOM4	Front COM Header	1. DSRB	2. DCDB
		3. RTSB	4. RXDB
		5. CTSB	6. TXDB
		7. RIB	8. DTRB
		9. NC	10. GND

JLCM	LCM	1. PWR_BTN	2. RST_BTN
		3. TXDC	4. RXDC
		5. GND	

JBMC_I2C1	BMC IPMI	1. I2C1SDA	3. I2C1SCL
		2. GND	4. NC

3.5 LEDs

3.5.1 Front Panel LED

Power	Yellow	System is On
	Blinking	System is in Standby; System is off, but has AC power
	Off	System has no AC power
UID	Blue	UID activity detected
	Off	No UID activity detected
System Error	Red	Critical system failure detected (processors, memory, voltage regulators, thermal events,fan failures, NMI, etc)
	Off	No critical failures detected
Hard Disk	Green (Blinking)	Disk activity detected
	Off	No disk activity detected

3.5.2 Rear Panel LED

NIC 1 (Right Upward Triangle)	Yellow (Blinking)	1G link detected, activity detected (82599) / Activity detected (XL710)
NIC 1 (Left Upward Triangle)	Green (Blinking)	10G link detected, activity detected (82599) / 1/10G link detected (XL710)
NIC 2 (Right Downward Triangle)	Yellow (Blinking)	1G link detected, activity detected (82599) / Activity detected (XL710)
NIC 2 (Left Downward Tr	Green (Blinking)	10G link detected, activity detected (82599) / 1/10G link detected (XL710)
NIC 3 (Right)	Green (Blinking)	NIC1 activity detected
	Off	NIC1 is not active, LAN cable no connect
NIC 3 (Left)	Status LED	1G : Orange, 100M: Green 10M/No connect: Off
NIC 4 (Right)	Green (Blinking)	NIC2 activity detected
	Off	NIC2 is not active, LAN cable no connect
NIC 4 (Left)	Status LED	1G : Orange, 100M: Green 10M/No connect: Off

3.5.3 Internal LEDs

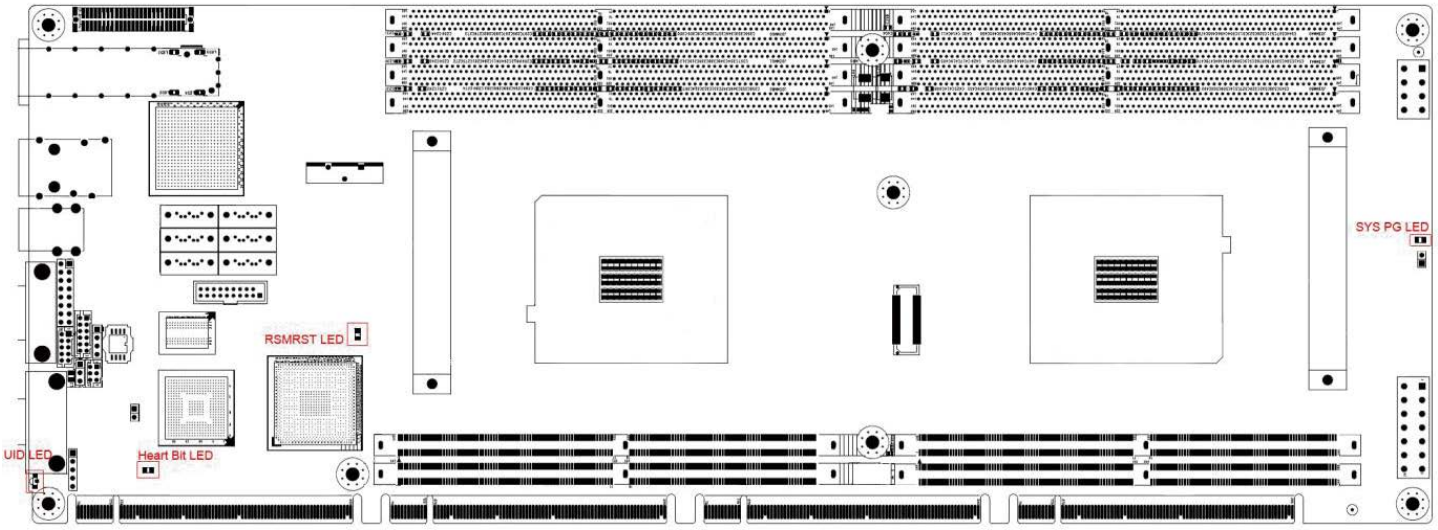

HEART BIT	ON(Blinking)	BMC activity detected
	OFF	BMC is not active
SYS PG LED	ON	System power good ready
	OFF	System power good is not ready
RSMRST PG LED	ON	Resume Well Reset ready
	OFF	Resume Well Reset is not ready
UID LED	ON	UID activity detected
	OFF	UID not activity detected

CAUTION: WHEN QUIET BOOT IS ENABLED, OEM LOGO WILL BE DISPLAYED INSTEAD OF POST MESSAGES.

Press **ESC** to run the setup procedure.

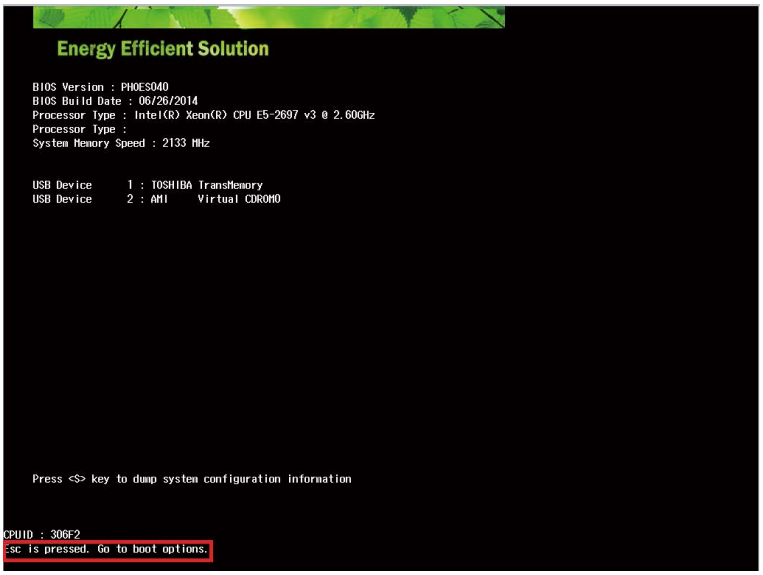

Choose the SCU to enter the Setup menu

CAUTION: FOR THE OFFICIAL RELEASED VERSION, THE LAST DIGIT OF THE BIOS VERSION MUST END IN AN "0."

Identify the BIOS Version

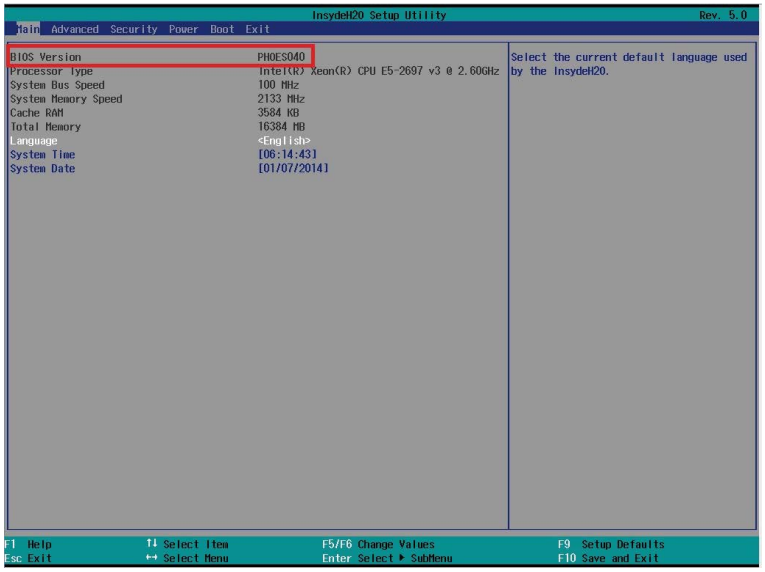

Load Optimal Default setting

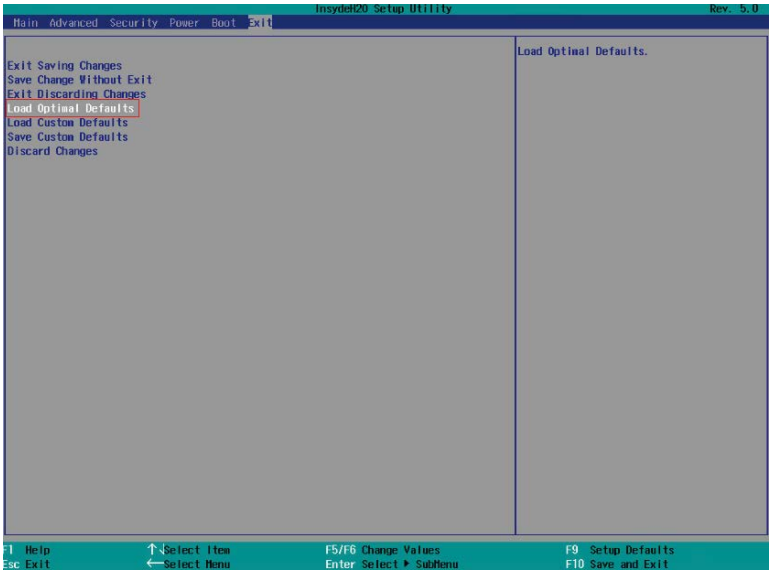

Save the setting and exit the BIOS setup utility.

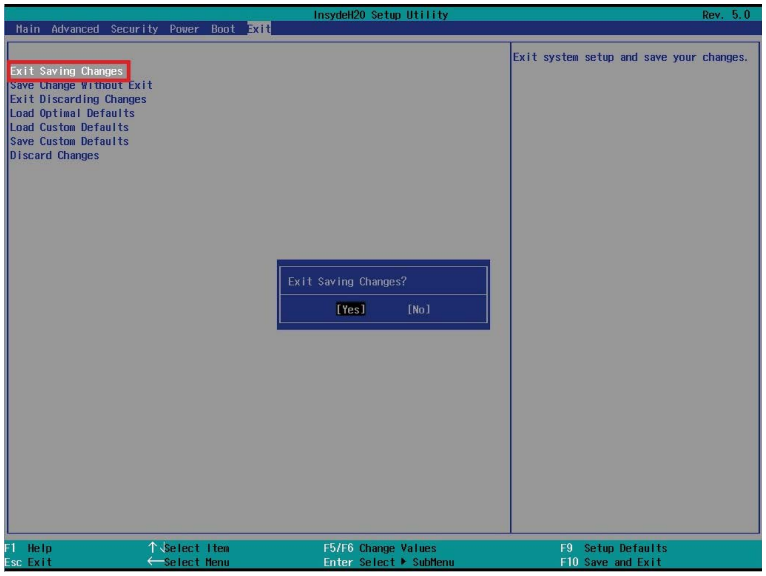

4.1 Updating BIOS

Important Notes:

To identify the current BIOS version, please check out on BIOS setup.

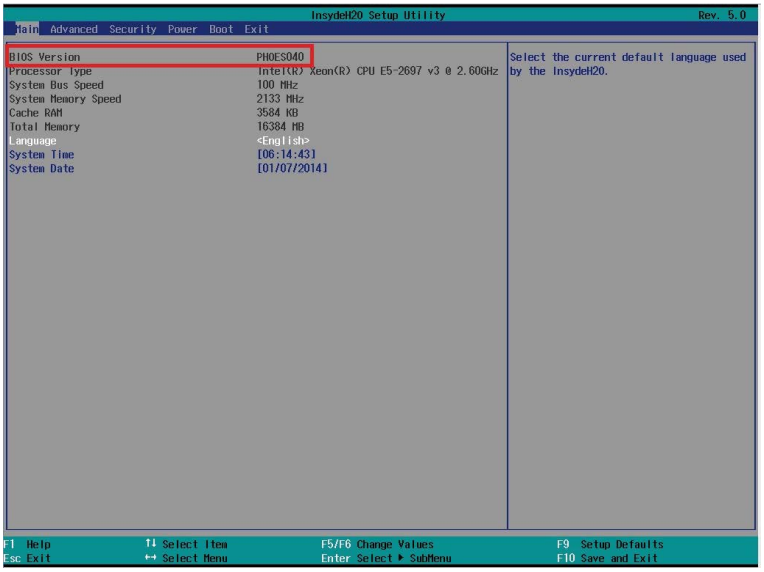

There are two methods to update the latest BIOS.

1. Update by Messiash Flash utility during POST.
2. Update by AMI AFUDOS utility under DOS environment

Update by Messiash Flash utility during POST

1. Prepare a USB mass storage device
2. Put BIOS bin file and mflash.cfg in Root directory.
3. Plug the USB mass storage device into a USB port of the target computer.
4. Turn on system.
5. Boot to BIOS POST screen, you will see hint messages:
   Press <S> key to dump system BIOS information
   Press <F> key to update BIOS
   Press <I> key to post system information
   Press <F4> key to open POPUP menu
6. Please press <F> key to enter Messiah Flash utility.
7. Follow the instruction until the message “Update Flash successfully” that had been displayed.
8. Reboot system.

Update by Insyde H2offt-d utility under DOS environment

If you need to update Flash in the DOS environment, please use H2offt-d utility. To use this utility, you must include the flash.bat , H2offt-d. exe, and bin file in the same folder. Please follow the instructions to update whole flash part:

Execute flash.bat to update Flash in the DOS environment.

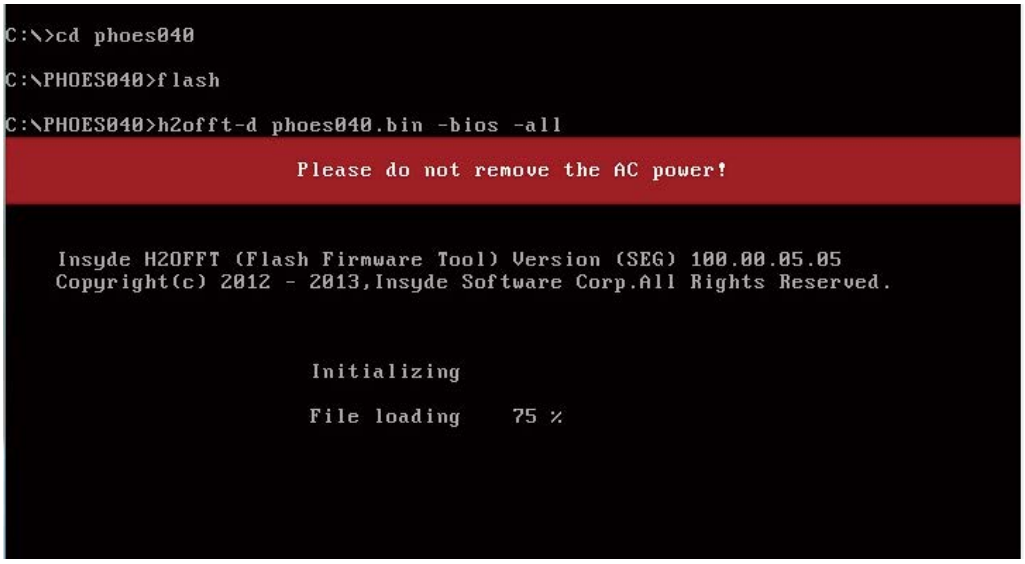

Reboot system.

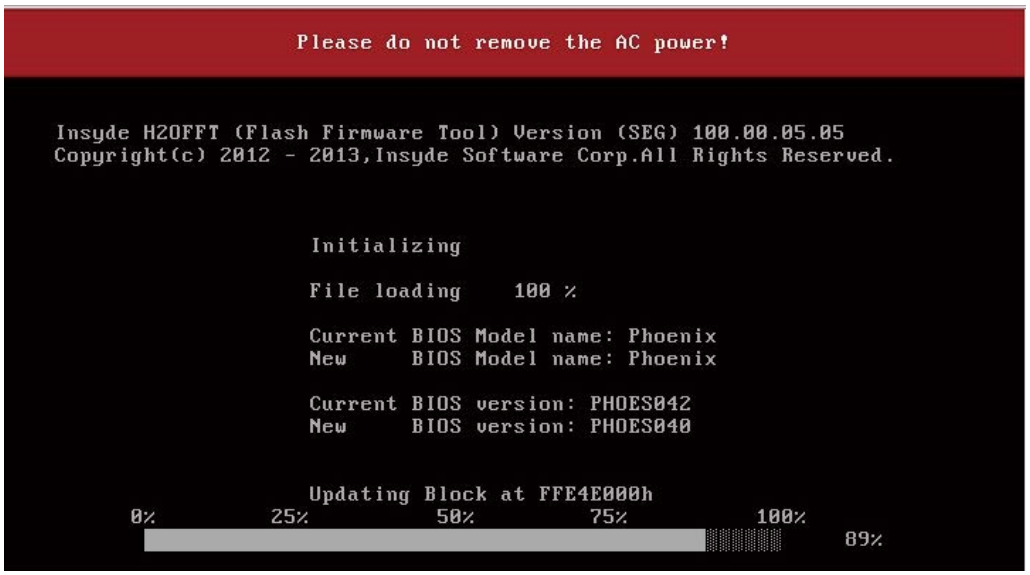

Chapter 5. BMC Configuration and Settings

Insert Ethernet LAN cable into the BMC LAN port. There are two methods to setup BMC IP:

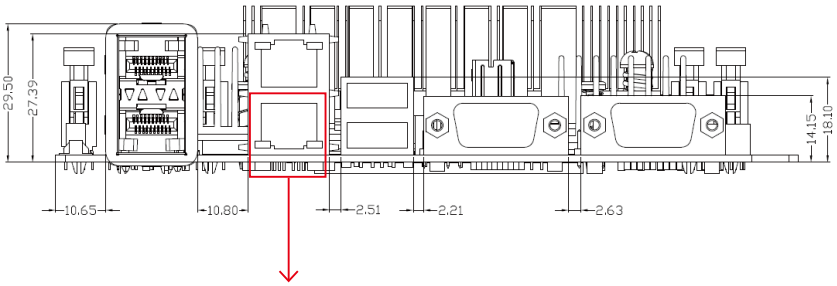

5.1 Method 1 (Use the BIOS setup)

- BIOS SETUP → Advanced → H2O IPMI configuration → BMC configuration → IPv4 source → Static

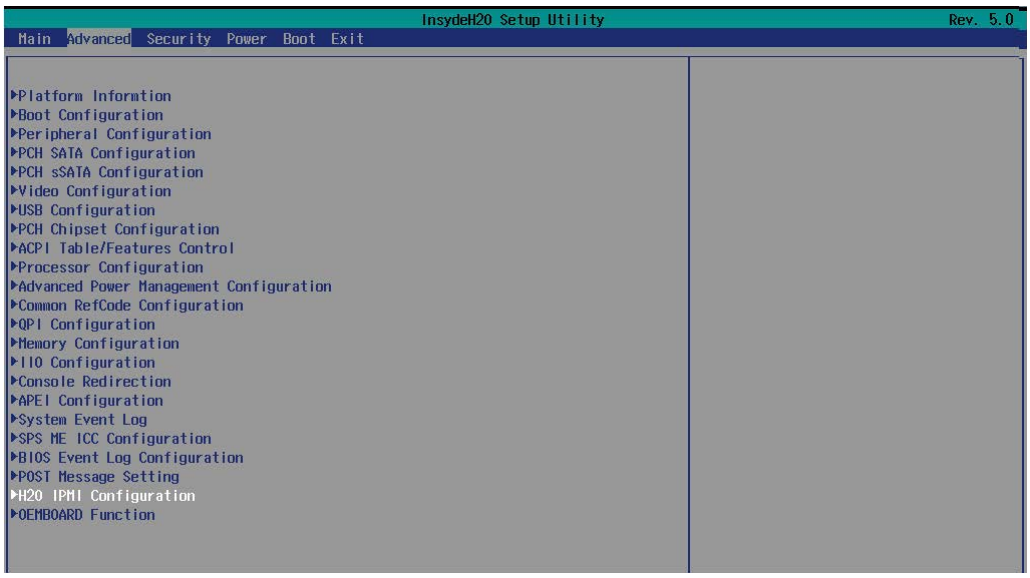

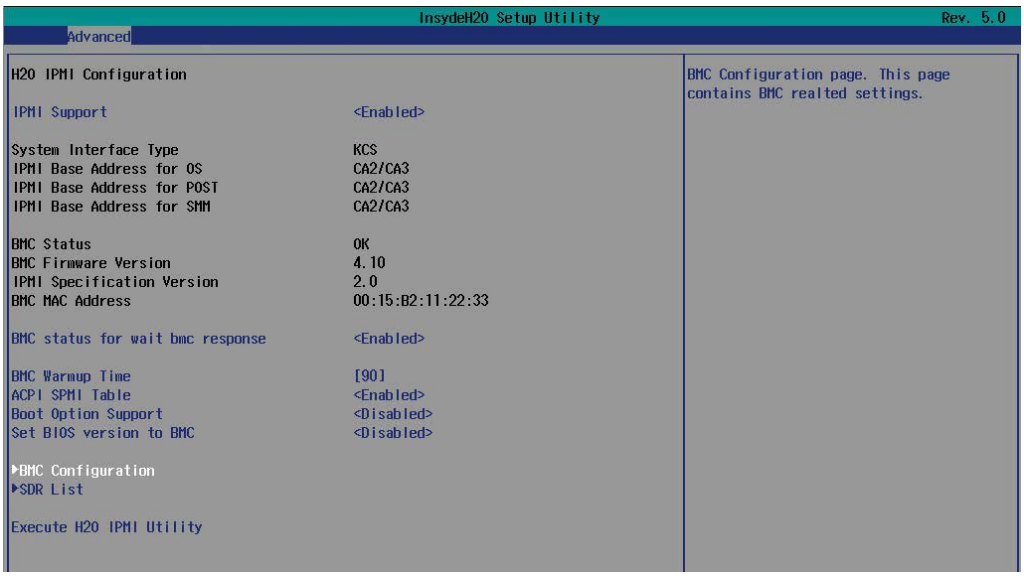

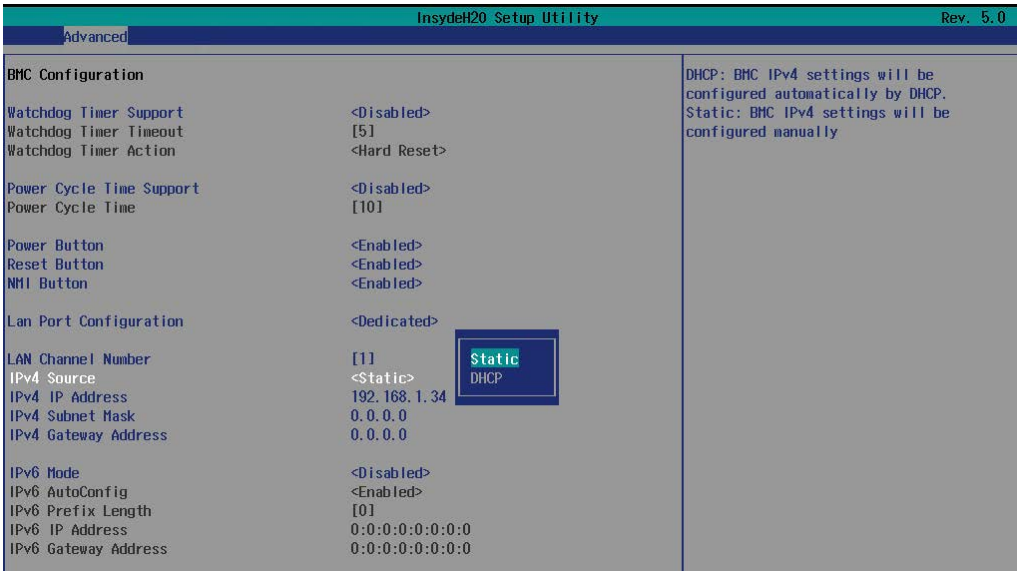

2. Input IP address. Set static IP.

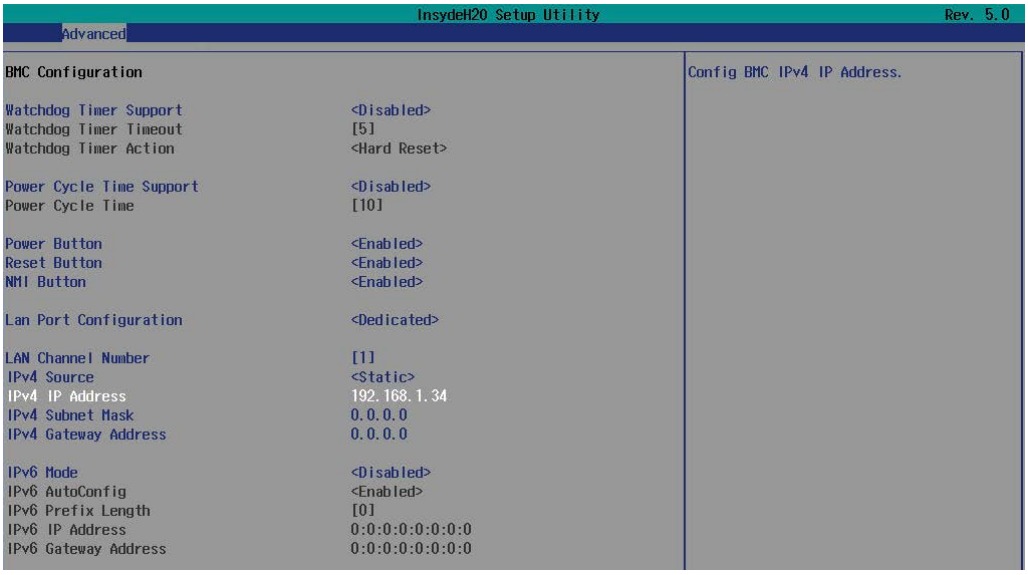

3. Input subnet mask address.

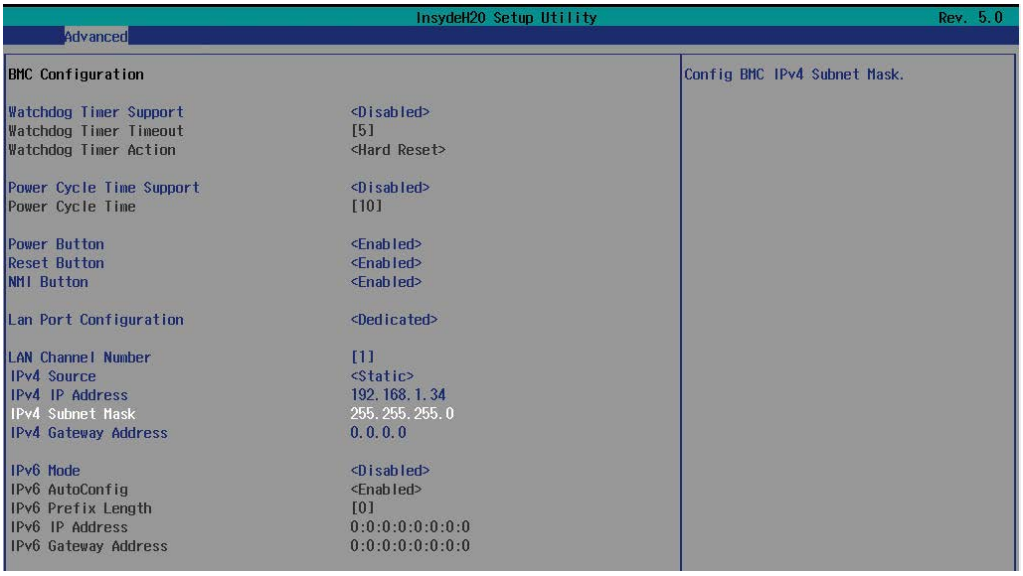

5.2 Method 2 (Use a Dos tool - Syscheck)

1. Type : sc –lanset

2. Modify IP setting

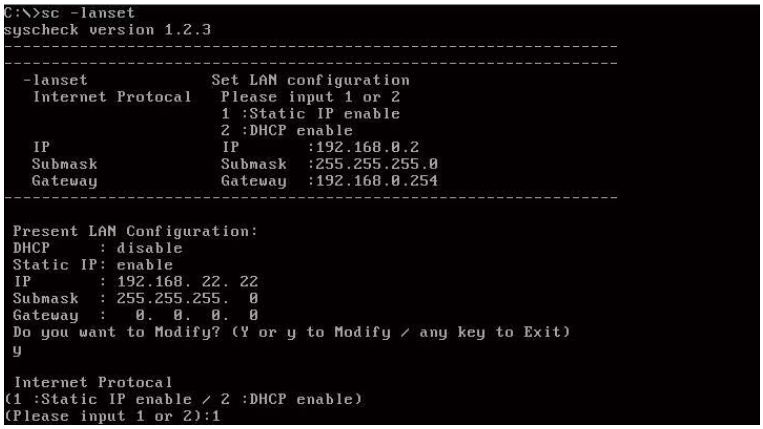

> **Note:** Type 1 for selecting static IP mode or type 2 for selecting DHCP mode.

3. Input IP address

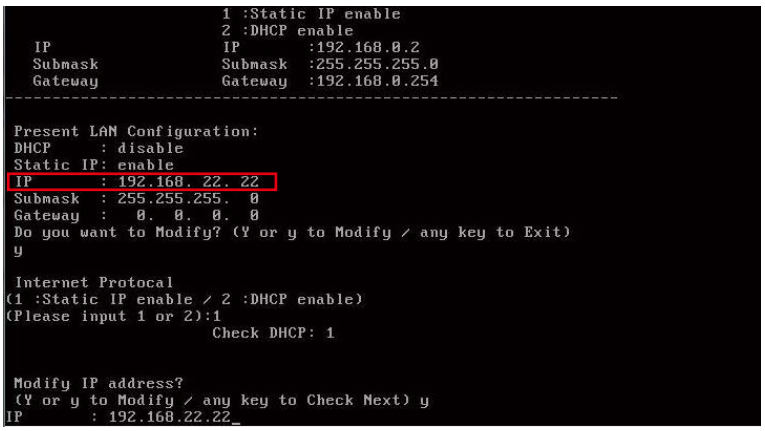

4. Input submask address.
   Below IP address is an example using a default IP setting. User is allowed to change the IP address for realistic use.

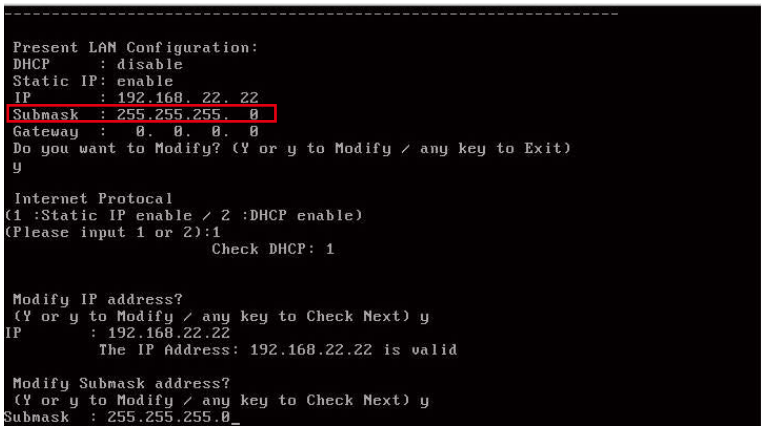

5. Finish BMC IP configuration.

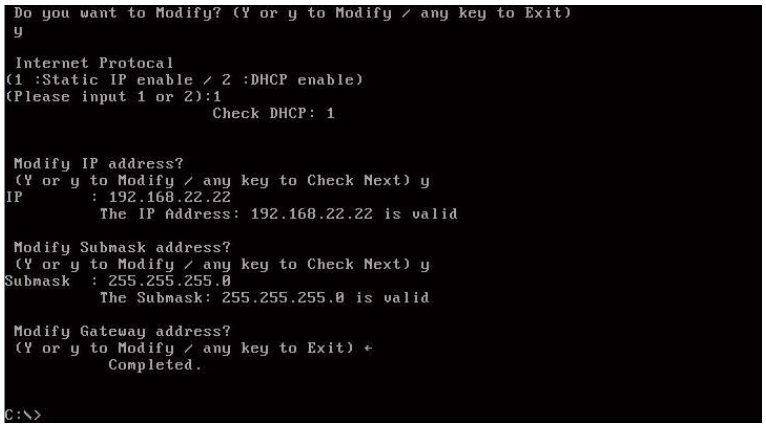

NOTE: TYPE SC.EXE –LANGET COMMAND TO OBTAIN BMC IP AND MAC ADDRESS.

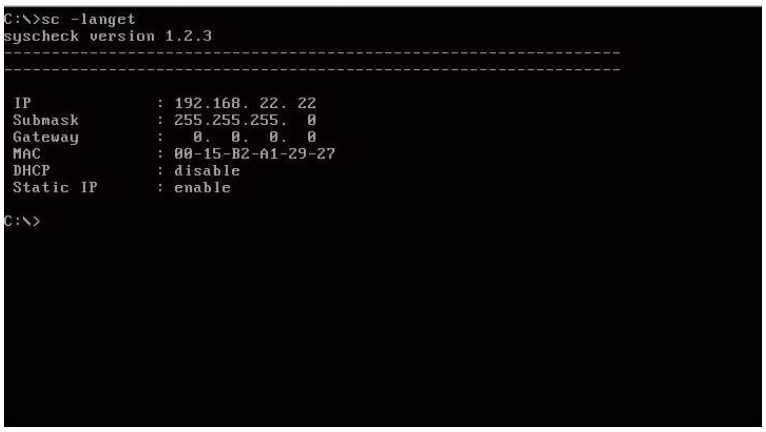

5.3 Connect to BMC

> NOTE: THIS FEATURE WORKS WITH JAVA 6 RUNTIME INSTALLED CONSOLE ENVIRONMENT.

Below IP address is an example using default IP setting. User is allowed to change the IP address for realistic use.

1. Open the browser then type default BMC IP address: 192.168.22.22

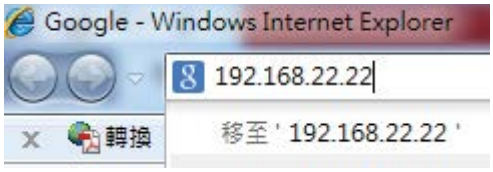

2. Use the default user name and password for first-time login to BMC WEB GUI.

Field:	Default
UserName:	admin
Password:	admin

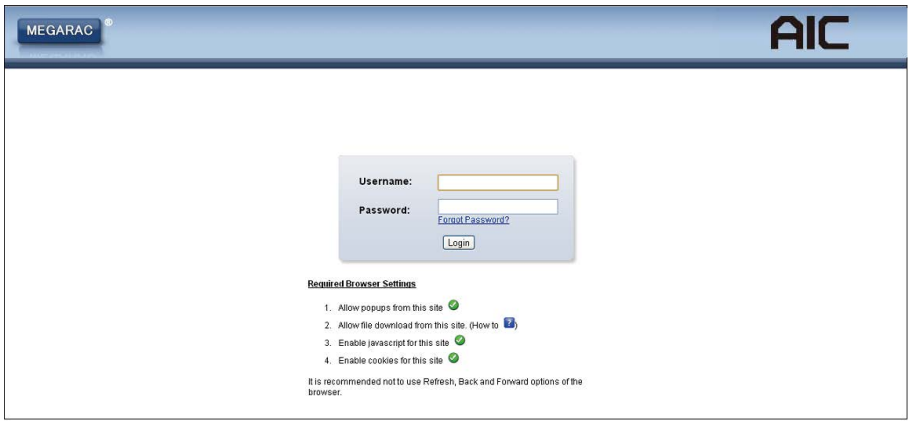

> NOTE: THE DEFAULT USER NAME AND PASSWORD ARE IN LOWER-CASE CHARACTERS.

> NOTE: USERS WHO LOGIN WITH THE ADMIN USER NAME AND PASSWORD WILL HAVE FULL ADMINISTRATIVE POWER.
> THE ADMIN PASSWORD CAN BE CHANGED AFTER LOGIN.

3. Information of firmware.

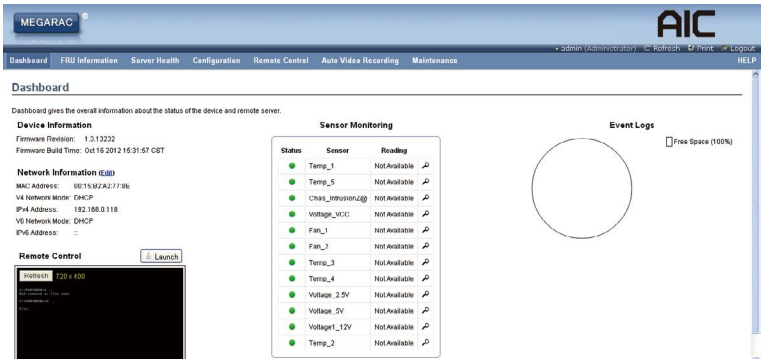

4. Server Health - Sensor Readings:

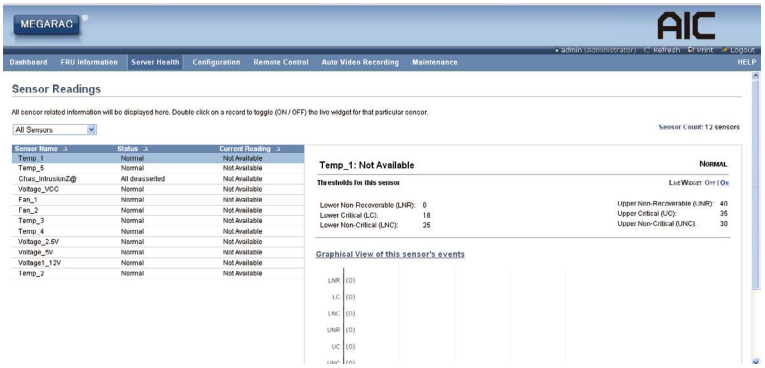

5. Configuration

Refer to AIC BMC User Guide for more information on AIC BMC.

Mouse Mode setting:

For Windows OS environment, set mode to absolute.
For Linux OS environment, set mode to relative

6. Remote Control:

Environmental setting:

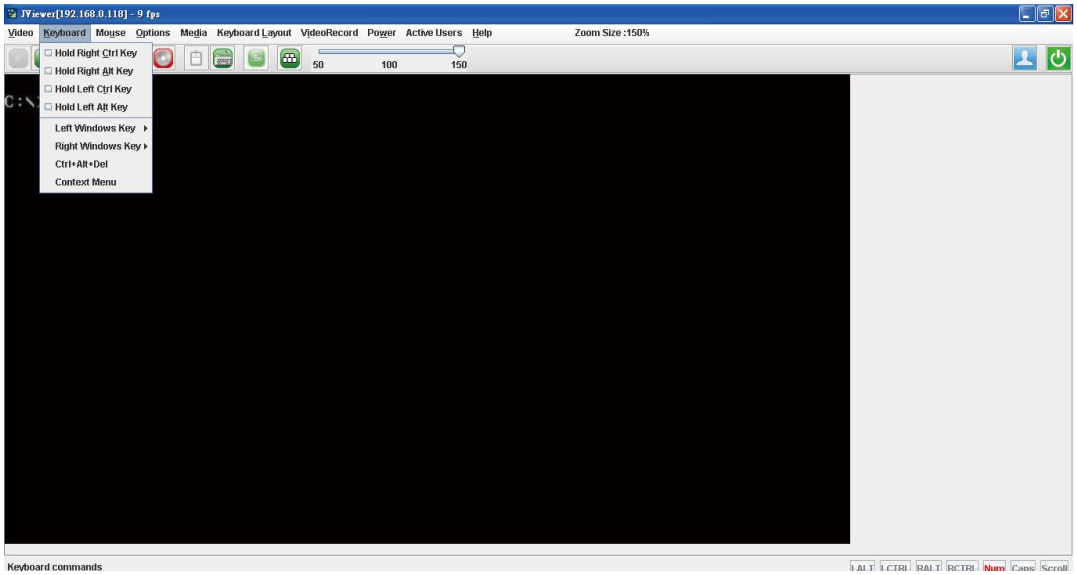

Press "ALT+C" for local and remote OS mouse control switching.

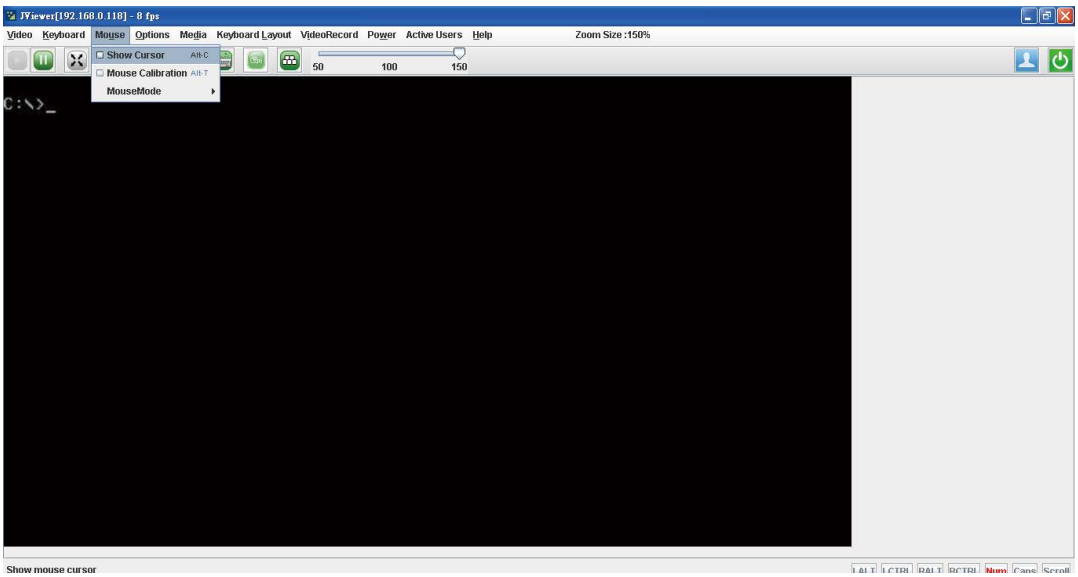

5.4 Updating BMC Firmware

1. Boot to the DOS (MS-DOS or Free DOS is workable)
2. Enter BMC firmware directory [XXXXXZYY]; XXXXX: project name ; YY: firmware version; Z: Identify character, C for official, B for Beta.
3. Execute **a.bat** batch file to update the BMC firmware
   Example:
   A:>cd SB301C01
   A:\ SB301C01>a.bat
   This is just an example. The latest BMC firmware version is available from the FAE or AIC website.
4. After update BMC firmware, please power off and then power on system.

NOTES:

1. DO NOT USE EMM386 IN DOS ENVIRONMENT WHEN UPDATING FIRMWARE OR YOU WILL GET A FAIL.
2. IN SOME CRITICAL CONDITION, AFTER UPDATING BMC FIRMWARE OR CONFIG FILE, YOU MIGHT NEED TO UNPLUG AC POWER CORD 5 SECONDS AND THEN PLUG AC POWER CORD TO RESET BMC, THEN UPDATED NEW FUNCTION CAN WORK PROPERLY.

Chapter 6. Hardware Introduction

This chapter provides detailed instruction guide on hardware instruction

6.1 BACKPLANE HARDWARE INTRODUCTION

6.1.1 Backplane

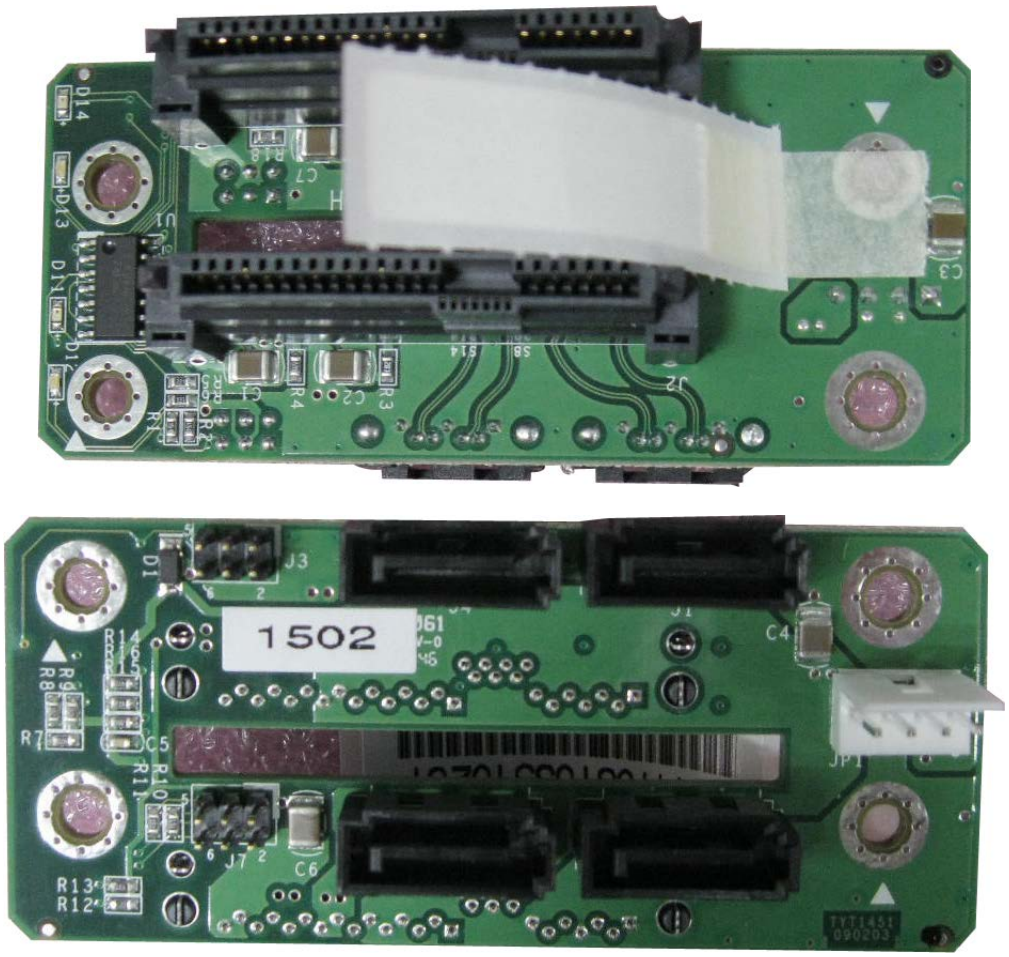

6.1.2 Backplane Placement & Location

PCBA Placement & Connector Location

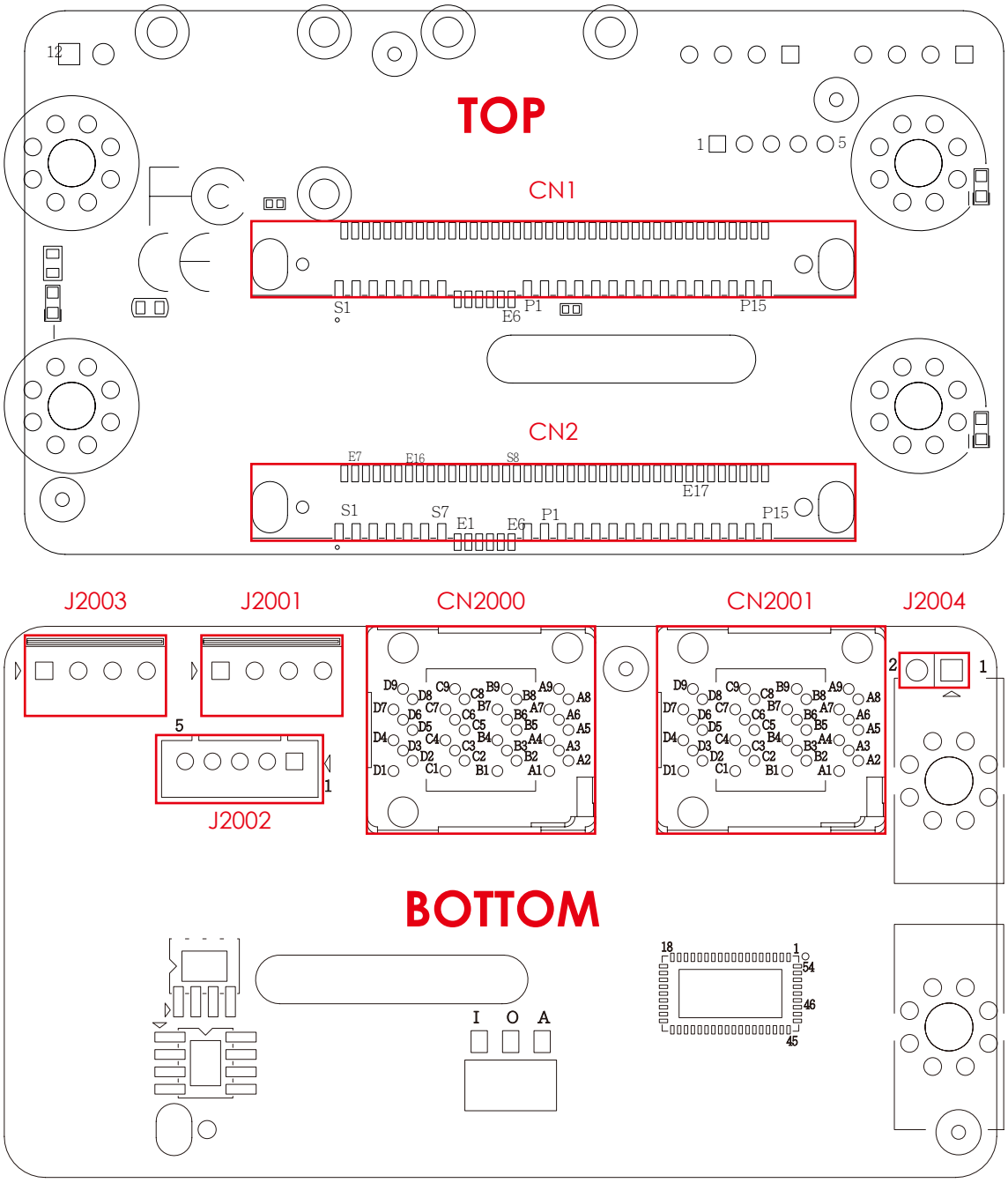

6.1.3 Internal Connectors/Jumpers

SFF - 8639 Connector- CN1 ,CN2

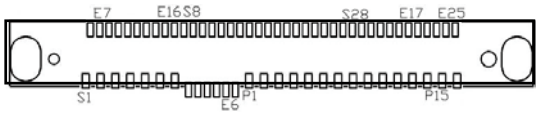

Power Connector- J2001,J2003

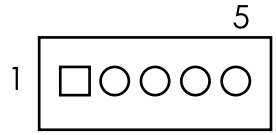

Pin	Description
1	+5V
2	GND
3	GND
4	+12V

Hot Plug Function Connector - J2002

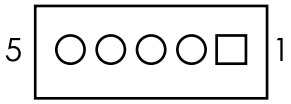

Pin	Description
1	GND
2	/E_ACT_IN0
3	/E_ACT_IN1
4	E/_FAIL0
5	E/_FAIL1

MINI-SAS HD Connector- CN2000 ,CN2001

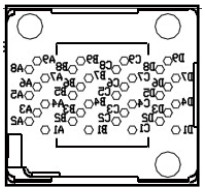

HDD Led Header- J2004

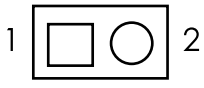

Jump Pin(1.2)	Description
Close	For Micron PCIE SSD
Open	For Intel PCIE SSD

6.2 RISER CARD HARDWARE INTRODUCTION

6.2.1 Riser Card

6.2.2 Riser Card Placement & Location

PCBA Placement & Connector Location

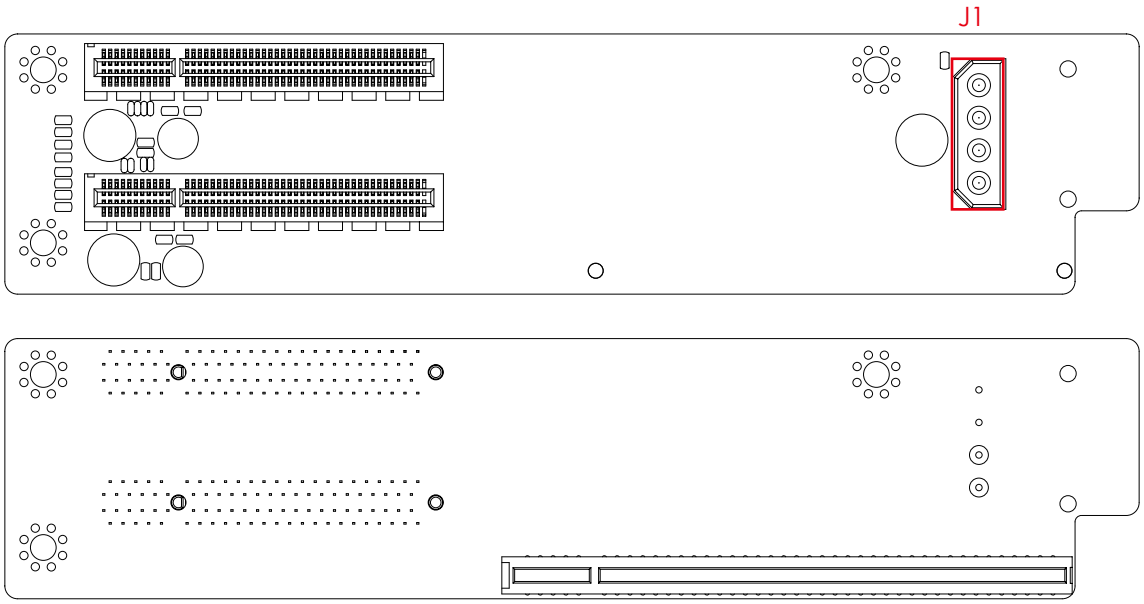

6.2.3 Internal Connectors/Jumpers

Power Connector – J1

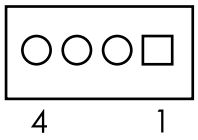

Pin	Description
1	+12
2	GND
3	GND
4	NC

6.3 Drive Slot Map

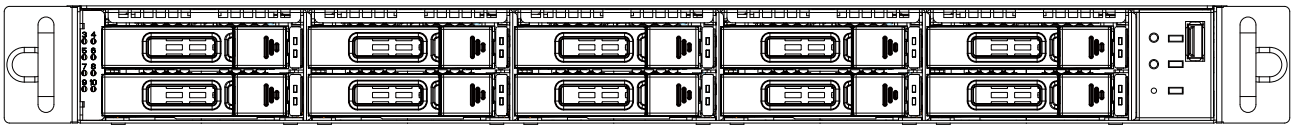

HBA card				
0	1	2	3	4
5	6	7	8	9

MegaRaid card				
1	2	3	4	5
6	7	8	9	10

Chapter 7. Technical Support

www.aicipc.com

- **TAIWAN**

Tel: +886 3 433 9188

Fax: +886 3 287 1818

Email : sales@aicipc.com.tw

- **CHINA**

Tel: +86.21.54961421, +86.21.54961422

Fax: Extension: 608

Email Technical Support: support@aicipc.com

- **AMERICA - West coast**

Tel: +1.909.895.8989

Fax: +1.909.895.8999

Email : sales@aicipc.com

- **AMERICA - East coast**

Tel: +1.973.884.8886

Fax: +1.973.884.4794

Email : njsales@aicipc.com

- **EUROPE**

Tel: +31.30.6386789

Fax: +31.30.6360638

Email:sales@aicipc.nl

Email Technical Support: support@aicipc.com